NOTICE

All drawings located at the end of the document

94-RF-08672

QUARTERLY REPORT

FOR APRIL THROUGH JUNE 1994
INCLUDING DATA SUMMARY FOR JANUARY THROUGH MARCH 1994

OPERABLE UNIT #1
IM/IRA TREATMENT FACILITY

PREPARED BY

ENVIRONMENTAL RESTORATION PROGRAM DIVISION
ENVIRONMENTAL OPERATIONS MANAGEMENT

EG&G ROCKY FLATS INC
ROCKY FLATS ENVIRONMENTAL TECHNOLOGY SITE
GOLDEN COLORADO

A-OU01 4

TABLE OF CONTENTS

SECTION A OPERATIONS SUMMARY

	PAGE
1 0 OPERATIONS SUMMARY INTRODUCTION	4
2 0 INFLUENT WATER CHARACTERISTICS	4
2 1 INFLUENT FLOW RATES	4
2 2 INFLUENT CONTAMINANTS	7
3 0 TREATMENT FACILITY PERFORMANCE	8
3 1 QUANTITY OF WATER TREATED	8
3 2 WATER FROM OTHER SOURCES	8
3 3 CHEMICAL USAGE	8
3 4 WASTE GENERATION	9
3 5 OPERATING COSTS	1 0
3 6 MAINTENANCE	1 0
4 0 ENVIRONMENTAL COMPLIANCE/EFFLUENT TANK SAMPLING	1 0
5 0 REPORTS AND CORRESPONDENCE	1 0
6 0 ANTICIPATED OPERATIONS FOR NEXT QUARTER	1 1
7 0 OPERATIONS SUMMARY/CONCLUSIONS	1 1

SECTION B DATA SUMMARY FOR JANUARY AND MARCH 1994

		PAGE
8 0	DATA SUMMARY INTRODUCTION	1 2
9 0	GROUNDWATER ANALYSIS	1 2
9 1	GROUNDWATER ELEVATIONS	1 2
1 0 0	INFLUENT CHARACTERIZATION	1 4
1 1 0	CONTAMINATION DESTRUCTION/UV SYSTEM AND ION EXCHANGE SYSTEM EFFICIENCY SAMPLING	1 5
1 1 1	IX#1 PERFORMANCE	1 5
1 1 2	IX#2 PERFORMANCE	1 5
1 1 3	IX#3 PERFORMANCE	1 7
1 1 4	IX#4 PERFORMANCE	1 7
1 1 5	UV/PEROXIDE SYSTEM PERFORMANCE	1 7
1 2 0	DATA SUMMARY/CONCLUSIONS	2 4

SECTION A OPERATIONS SUMMARY

1 0 OPERATIONS SUMMARY INTRODUCTION

The Operable Unit No 1 (OU 1) water treatment facility located in Building 891 is responsible for treating groundwater collected from the 881 Hillside area The water is collected in a french drain located on the 881 hillside and pumped to the influent storage tanks located at Building 891 (see Figure 1 0 1) Next the water is treated with an ultraviolet (UV) light/hydrogen peroxide system (for removal of volatile organic compounds) and a four step ion exchange (IX) system (for removal of uranium total dissolved solids hardness alkalinity anions and selected metals) After treatment the water is stored in one of three effluent storage tanks until laboratory sample results verify that the water is acceptable for discharge into the South Interceptor Ditch (SID)

This report reflects the Building 891 Treatment Facility operations and data that are critical for determining optimal operating practices Section A (Operations Summary) of the report deals specifically with day to day operations activities for the April through June 1994 period Section B (Data Summary for January through March 1994) of the report includes specific data for the groundwater wells influent sources and treatment system performance Validated results are used to evaluate this data

2 0 INFLUENT WATER CHARACTERISTICS

Influent water for the treatment facility comes from three different sources on the 881 Hillside These sources include the 881 footing drain the recovery well CW001 (located upgradient of the french drain) and groundwater intercepted by the french drain Water from the 881 footing drain flows by gravity into the french drain mixes with groundwater and collectively flows by gravity towards the french drain sump (see Figure 2 0 1) Recovery well water is pumped directly into the french drain sump and mixed with the groundwater/footing drain water The combined water is then pumped from the french drain sump into the treatment system influent tanks Sampling is performed at each of the 881 footing drain recovery well and the french drain sump locations for characterization of the influent waters

2 1 INFLUENT FLOW RATES

Repairs to the recovery well (CW001) were completed on June 17 1994 The original underground line from the well to the valve vault appears to have been broken by movement of the hillside The underground line was abandoned and a new double contained line was installed above ground In order to alleviate concerns with the

Figure 2 0 1

881 HILLSIDE AREA

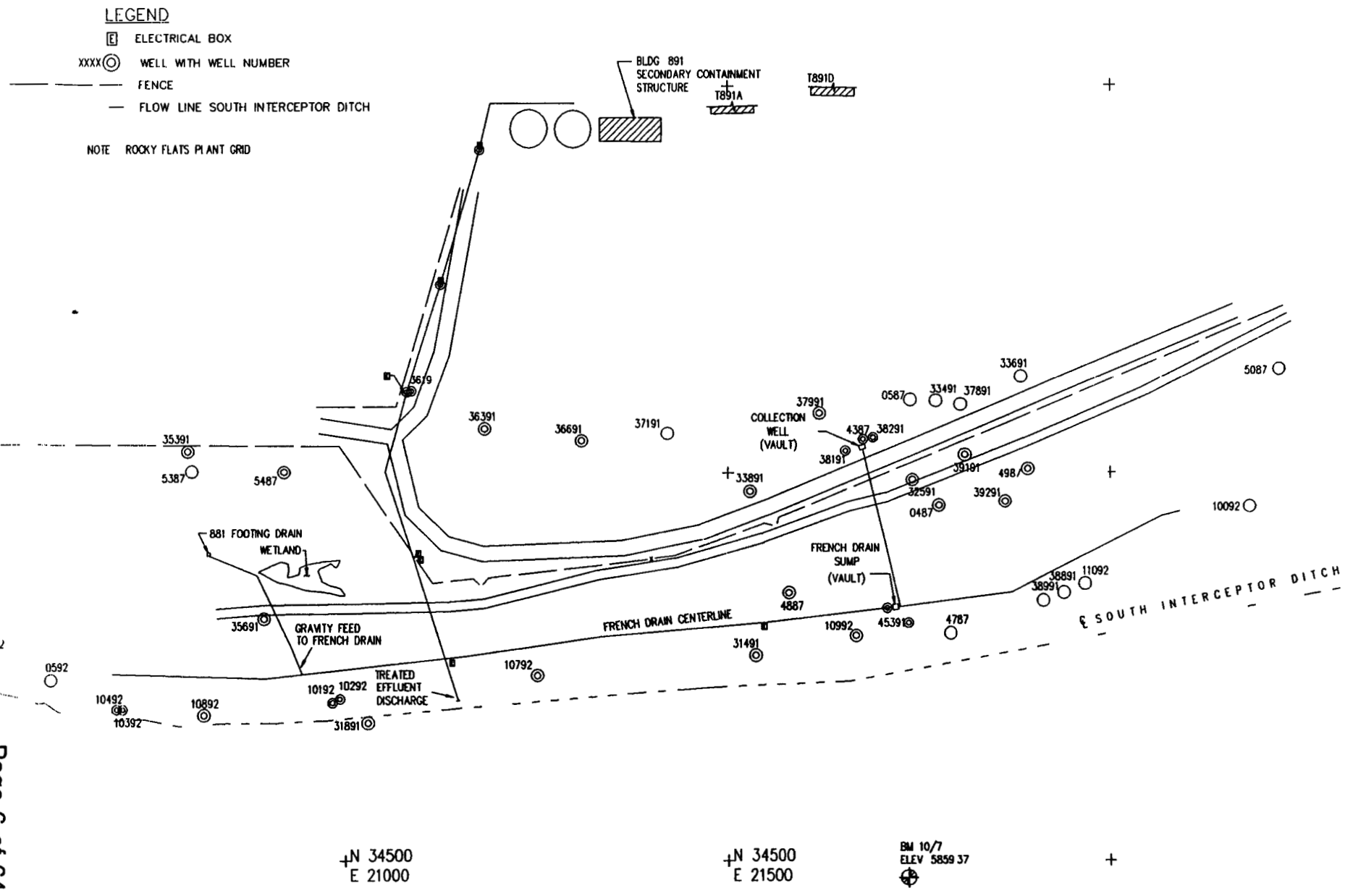

pressure ratings on the new piping installation a new smaller pump was installed on the system (downsized from 13 stage to 9 stage) The nine stage pump has adequate capacity for the application Approximately 350 gallons of water were pumped out of the well between June 17 and June 30 Currently the well is being pumped completely dry in order to collect the maximum amount of water during each collection period Significant quantities of water (100 200 gallons per day) are being pumped out of the well since June 30 Consistently pumping the well dry may also result in better production as some sediments may have been deposited over the period of damage to the well Previously the water was only collected when levels reached the 4 to 8 foot range This range was considered a safe operating level to protect the pump from running dry or collecting solids from the bottom of the well Some risk to the integrity of the pump/motor will be assumed in pumping the well to extremely low levels However quantities of water removed from the well can be increased by assuming this risk

The stabilization project for the 881 footing drain flowmeter was completed in late March 1994 The flowmeter is now calibrated and operational Stabilization efforts have resulted in significantly increased reliability in flow measurements The stabilization has eliminated variations in depth of water sensed by the probe due to movement of the weir containment structure Measurements over the quarter range from two to twelve GPM Maximum flows were encountered from mid April through the end of May Approximately 700 000 gallons of water was collected by the system from the footing drain during the past quarter This data is approximate due to three weeks of questionable data Two weeks of data indicate possibility of probe failure (erratic readings) Some additional data was lost during a period when the system was undergoing configuration changes and calibration A weekly check on the calibration check has been implemented in order to ensure that the equipment operates satisfactorily in the future

Quantities of water pumped from the french drain are taken from the influent magnetic flowmeter to the UV/Peroxide system This flowmeter has demonstrated more consistent performance compared to the previous paddle wheel type flowmeter During the April through June quarter 575 000 gallons of water were collected from the french drain sump and the effluent storage tanks were at maximum capacity for two months of the spring

2 2 INFLUENT CONTAMINANTS

Review of the most recent data (January through March 1994) from the french drain sump indicates no significant change in the levels of contamination present in the groundwater However recent preliminary results indicate that increased levels of VOCs have been detected in the recovery well This may impact the quality of water from the french drain sump However the volatiles detected are easily treated at the 891 facility

3 0 TREATMENT FACILITY PERFORMANCE

The treatment system performance is measured by various criteria Quantity of water treated contamination destruction or removal efficiency waste generation operating costs chemical usage and system reliability Data on these criteria are utilized to modify or adjust the system as necessary for optimal performance An operations database system is presently under development for computerized data entry of all operational information

3 1 QUANTITY OF WATER TREATED

Approximately 540 000 gallons of groundwater were treated at the treatment facility during the past quarter Five effluent tanks (560 000 gallons) of treated effluent were released to the South Interceptor Ditch Approximately 2 500 000 gallons of water have been processed through the system to date

3 2 WATER FROM OTHER SOURCES

An estimated 3 000 gallons of decontamination pad water was accepted at the treatment facility during the quarter The decontamination pad water requires treatment at Building 891 due to low level volatile organic compounds (VOCs) that cannot be processed through the 374 evaporator Samples taken at the UV influent location during the treatment of the decontamination pad water (decon water was combined with french drain water) indicated the presence of low level (less than 10 ppb each of carbon tetrachloride and trichloroethene) organics Normal treatment parameters were used for the treatment of this water Treatment effectiveness for this water was not very good due to the presence of carbon tetrachloride

Water (3 000 gallons) from the soil vapor extraction (SVE) unit (currently operated at Operable Unit #2) was transferred to Building 891 for testing on the UV/peroxide system during the month of March Results from testing are presented in Section 11 of the Data Summary

3 3 CHEMICAL USAGE

Hydrochloric acid is utilized in the ion exchange system for regeneration of resins in IX#2 (weak acid cation exchanger) and IX#3 (strong acid cation exchanger) The resin in IX#4 (weak base anion exchanger) is regenerated with sodium hydroxide IX#1 is a strong base anion exchange resin which is not regenerated

A total of 1670 gallons of hydrochloric acid and 604 gallons of sodium hydroxide were used for regeneration and neutralization activities during the April through June 1994 period Approximately 14 gallons of hydrogen peroxide were used for the UV/Peroxide destruction unit

3 4 WASTE GENERATION

Waste generated at the treatment facility includes sock filters and neutralized regenerant water One 55 gallon drum of sock filters has been generated in 27 months of operation A reduction in the number of sock filters generated at the facility has been experienced over the past year due to the prefiltering of incidental waters (such as water from the outdoor secondary containment areas at Building 891) placed in the Building 891 sump Eleven tanker truck loads of neutralized regenerant water from Tank T 210 (44 000 gallons) were sent to the 374 evaporator for processing this quarter Figure 3 4 1 compares the quantity of water treated to the amount of secondary waste generated and sent to the 374 evaporator

BLDG 891 TREATED WATER VS SECONDARY WASTE

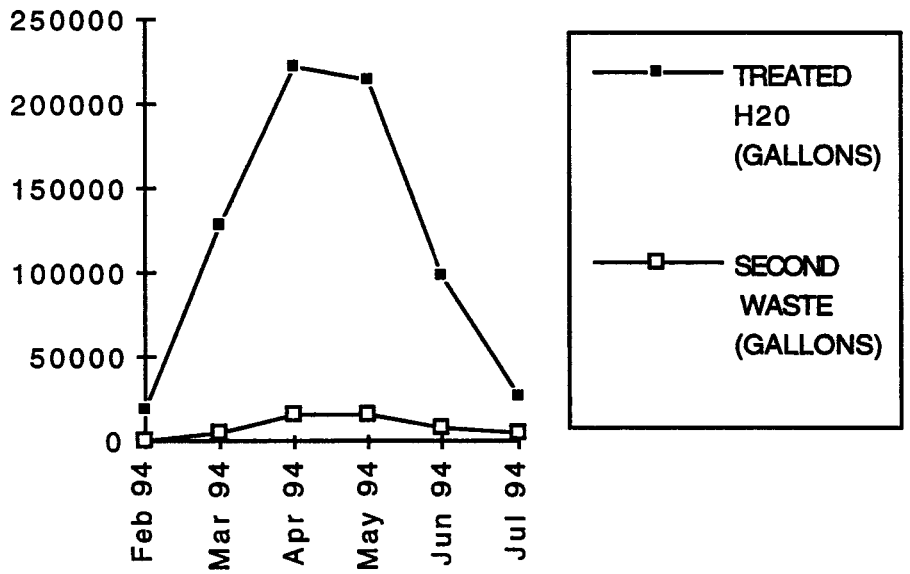

FIGURE 3 4 1

3 5 OPERATING COSTS

Subcontracted operating costs for this quarter totaled approximately $70 000 These costs include chemical purchases spare parts labor and document preparation which are performed under the current operations and maintenance subcontract

3 6 MAINTENANCE

The following maintenance was performed during the April through June operating period

The 881 footing drain flowmeter probe was replaced

The acid pump back pressure valve was replaced Pulsation dampeners were ordered for both the acid and caustic systems

The recovery well repair was completed The original underground line was abandoned and an above ground line was installed to transfer the water to the valve vault (approximately 13 in length)

Funding was approved for the replacement of infrastructure in Building 891 Infrastructure suffered damage due to fumes from the hydrochloric acid spill in December 1992 The work will include the replacement of pipe hangers conduit fasteners unistrut and painting

4 0 ENVIRONMENTAL COMPLIANCE/EFFLUENT TANK SAMPLING

Each effluent tank is sampled and analyzed prior to discharge During the past quarter five effluent tanks were discharged (approximately 560 000 gallons) into the south interceptor ditch All parameters were below ARAR for these tanks

5 0 REPORTS AND CORRESPONDENCE

Work continues on the final approval for Standard Operating Procedures (SOPs) for Operation and Maintenance activities at the Building 891 Treatment Facility

The 881 Footing Drain Report was submitted to the DOE and the agencies This report recommends the discontinuation of the 881 footing drain as a source to the French Drain Sample results from the 881 footing drain indicate that this source meets ARARs and does not require treatment

6 0 ANTICIPATED OPERATIONS FOR NEXT QUARTER

The Building 891 Infrastructure repair/replacement is scheduled for September 1994

Work on optimizing the in line GC will continue It is expected that the unit will be fully operational in August 1994

Upgrades on the UV/peroxide system will take place in July 1994 These upgrades should ensure prevention of the ballast overheating and potential damage to the system

Normal operations will continue through the quarter as needed Some periods of downtime will be necessary to perform upgrades to the UV system Sufficient influent capacity will be available to handle any waters from the french drain during periods of downtime

7 0 OPERATIONS SUMMARY/CONCLUSIONS

Approximately 2 500 000 gallons of waters have been treated to date at the treatment facility Approximately 540 000 gallons of groundwater were treated during the past quarter An estimated 560 000 gallons of effluent were effectively treated and released from the effluent tanks The summer months will be much slower with an estimated 100 000 gallons that will require treatment during the next quarter This slowdown will allow for maintenance activities and upgrades to be completed on several systems

The 881 Footing Drain Report comparing the OU1 ARARs to the analytical results was submitted to the DOE and the agencies The agencies may use this report to determine whether the continued treatment of the 881 footing drain water is necessary EG&G and DOE have proposed the disconnection of this source

SECTION B DATA SUMMARY FOR OCTOBER DECEMBER 1993

8 0 DATA SUMMARY INTRODUCTION

This section of the report reflects the Building 891 Treatment Facility operations parameters and associated Operable Unit #1 data Documentation included covers the time period from January through March 1994 All data has been validated Data collected are used to determine optimal operating practices at the 891 treatment facility

9 0 GROUNDWATER ANALYSIS

The French Drain Performance Monitoring Plan (FDPMP) requires data for monitoring french drain performance The FDPMP requires groundwater level measurements of designated french drain monitoring wells 10092 10192 10292 10392 10492 10592 10692 10792 10892 10992 11092 39991 45391 4887 35691 31491 and 4787 Additionally quarterly water quality sampling of the wells is required Not all locations are sampled for all parameters due to the small quantities of water generated at most of these locations A summary of the results is found in Appendix A

Results of the groundwater analysis indicate similar constituents as in the past Sulfate total dissolved solids and gross alpha are the only parameters exceeding ARARs These exceedances are primarily in wells near the western termination of the french drain Low level volatile detections (toluene ≈ 3 0 ppb tetrachloroethene ≈ 0 8 ppb) were found in well 10792 (located downgradient of french drain) but were well below the ARARs established for OU1

9 1 GROUNDWATER ELEVATIONS

Figure 9 1 1 is a water level map that was constructed from April through June 1994 water level data Water level grids were constructed from these data using a 50 foot grid spacing The existing bedrock grid for OU1 was then subtracted from the respective water level grid to obtain a saturated thickness grid Areas within these saturated thickness grids that were negative were considered to be unsaturated In these areas the calculated water level grid extended below the bedrock surface The saturated thickness grids were then edited to match known areas within OU1 that contain dry wells These edited saturated thickness grids were then added to the bedrock grid to obtain a new water level grid for each quarter This water level grid is the basis for the presented map

The map presents the configuration of water levels at the Operable Unit 1 (881 Hillside) from April through June 1994 Examination of the current map compared to those of previous quarters indicates that large areas of the 881 Hillside continue to appear unsaturated These conditions appear to remain relatively unchanged from the first quarter to the second quarter of 1994

10 0 INFLUENT CHARACTERIZATION

Influent water for the treatment facility comes from three different sources on the 881 Hillside These sources include the 881 footing drain the recovery well CW001 (located upgradient of the french drain) and groundwater intercepted by the french drain Water from the 881 footing drain flows by gravity into the french drain mixes with groundwater and collectively flows by gravity towards the french drain sump Recovery well water is pumped directly into the french drain sump and mixed with the groundwater/footing drain water The combined water is then pumped from the french drain sump into the treatment system influent tanks Sampling is performed at each of the 881 footing drain recovery well and the french drain sump for characterization of the influent waters

Samples could not be recovered from the recovery well during the January through March quarter due to damage to the well piping However preliminary samples taken at the repaired well (samples taken in June and July) indicate that VOC contamination is present in the well Reasons for the increase in detected volatiles may include a build up of contamination during the period of non collection the migration of contamination into the area of the well s influence a larger area of influence due to increased quantities of water removed from the well or that the previously utilized bubbler type level detection system adversely influenced the results Preliminary concentrations (not validated) detected in the recent sample data are as follows

Trichloroethene	1000 ppb	1 1 1 Trichloroethane	5 ppb
Tetrachloroethene	100 ppb	Carbon Tetrachloride	5 ppb
1 1 Dichloroethene	20 ppb		

Previous sample results at this location demonstrated results under 20 ppb for trichloroethene and tetrachloroethene Further detail and the validated data will be included in the next quarterly report when validated data becomes available

Appendix B illustrates the analysis results for January through March 1994 at the French Drain Sump and 881 Footing Drain respectively None of the parameters were found to be above ARAR with the exception of the Total Dissolved Solids which remain above the ARAR of 400 mg/l

11 0 CONTAMINATION DESTRUCTION/UV SYSTEM AND ION EXCHANGE SYSTEM EFFICIENCY SAMPLING

The primary purpose of sampling inside Building 891 is to determine the efficiency of the system in the removal of target contaminants (uranium metals anions VOCs) No significant variations in radiochemistry water quality or metals are found in any influent waters sampled Table 11 5 1 and Table 11 5 2 describe UV system influent and UV system effluent data Some samples taken at the UV influent location are representative of decontamination pad water or soil vapor extraction unit water Incidental waters accepted such as the decontamination pad or soil vapor extraction unit appear to be the primary contributors to organics found at the UV influent location

11 1 IX#1 PERFORMANCE

IX#1 contains a strong base anion exchange resin which serves to remove uranium from the groundwater Influent water contains uranium in the form of a carbonate complex (negatively charged) This ion loads on the weak base resin located in the first ion exchange column thus removing uranium from the water Unlike the other resins in the system this resin is not regenerated Influent and effluent results for IX#1 are shown in Table 11 1 1 and 11 2 1 These results are consistent with previous samples taken at this location Influent uranium activity levels continue to remain below 10 pci/l A 99/ reduction in the uranium activity level is routinely achieved

11 2 IX#2 PERFORMANCE

The IX#2 resin is a weak acid cation exchange resin This primary function of the resin is to remove hardness associated with alkalinity (calcium and magnesium) Since these parameters are not of special interest (no ARARs) samples are not taken to determine the efficiency of this column

TABLE 11 1 1

891 IX1 COLUMN PERFORMANCE January 1994 March 1994

Location	Sample Number	Sam Date	Chemical	Result	Unit Meas	Error	Qualif	ARAR	#Sam > ARAR
891IXINF	FT10176RG	15 Feb-94	URANIUM 233 234	4 4	PCI/L	0 81			
			URANIUM 235	0 29	PCI/L	0 18	J		
			URANIUM 238	2 7	PCI/L	0 6			
			TOTAL URANIUM	7 39		1 59		40	0
891IX1EFF	FT10178RG	15 Feb-94	URANIUM 233 234	0 069	PCI/L	0 069	U		
			URANIUM 235	0	PCI/L	0 042	U		
			URANIUM 238	0 034	PCI/L	0 034	U		
			TOTAL URANIUM	0 103		0 145		40	0
			Percent Removal						
			Total U IX1	98 61					
891IXINF	FT10195RG	10 Mar 94	URANIUM 233 234	3 9	PCI/L	0 48			
			URANIUM 235	0 25	PCI/L	0 12	J		
			URANIUM 238	2 9	PCI/L	0 4			
			TOTAL URANIUM	7 05		1		40	0
891IX1EFF	FT10196RG	10-Mar 94	URANIUM 233 234	0 039	PCI/L	0 16	U		
			URANIUM 235	0 047	PCI/L	0 095	U		
			URANIUM 238	0 039	PCI/L	0 078	U		
			TOTAL URANIUM	0 031		0 333		40	0
			Percent Removal						
			Total U IX1	99 56					

11 3 IX#3 PERFORMANCE

The IX#3 resin is a strong acid cation exchanger The primary function of this column is to remove metals from the water Sample results obtained from the effluent of IX#2 and IX#3 (Refer to Tables 11 3 1 and 11 3 2) provide valuable information about the performance of this resin

Three sets of samples were taken for metals at the IX#3 influent and effluent locations throughout the quarter Results are relatively consistent for all three samples taken Approximately 80 90% removal of calcium magnesium sodium potassium and strontium Zinc removal appears to be 60/ or better in results from recent periods Some evidence of selenium removal is also demonstrated However exchange of iron cations does not appear to very strong in the system It appears the resin is more selective to other cations and therefore does not effectively remove iron All discharged treated effluent was well below the ARAR for iron

11 4 IX#4 PERFORMANCE

The IX#4 resin is a weak base anion exchange resin The primary function of this resin is to remove anions (such as chloride sulfate nitrate/nitrite etc) from the water Removal efficiency sampling (Refer to Table 11 4 1 and 11 4 2) indicates that good removal of chloride sulfate and nitrate/nitrite continues in the system

11 5 UV/PEROXIDE SYSTEM

Samples taken at the UV influent and effluent locations during the treatment of the Soil Vapor Extraction (SVE) Unit water were used to verify the efficiency of the system for certain compounds One sample was taken of the raw SVE water and one was taken of the collective solution after mixing with french drain water in the influent tanks The primary contaminants were tetrachloroethene and carbon tetrachloride The tetrachloroethene (360 ppb highest concentration) was completely destroyed for both sets of samples taken Carbon tetrachloride achieved only 19/ removal at an initial concentration of 210 ppb Slightly more effective destruction (25/) was obtained on the second set of samples when lower (100 ppb) influent concentrations were tested In addition one load (3000 gallons) of decon water with low level volatile organics (<10 ppb) was accepted Refer to Tables 11 5 1 and 11 5 2 for an overall summary of the UV/peroxide system performance

TABLE 11 3 1

IX2 Effl nt M t l J ary 1994 M h 1994

Ch mi al	R s lt	Q alif	Val	Res lt	Q lf	Val	R lt	Q alif	V l	U it M	Max Conc	ARAR	# Sam > ARAR
S mpl Numb r	FT10180RG			FT10184RG			FT10197RG						
Sample D te	15-Feb-94			23 Feb 94			10-Mar 94						
ALUMINUM	19 8	B	V	26 3	B	V	22 5	B	V	UG/L	26 3	5000	0
ANTIMONY	18 0	U	V	18 0	U	V	18 0	U	V	UG/L	18	60	0
ARSENIC	4 3	U	JA	9 9	B	V	5 9	B	V	UG/L	9 9	50	0
BARIUM	1 6	B	V	1 0	B	V	6 7	B	V	UG/L	6 7	1000	0
BERYLLIUM	1 0	U	V	1 0	U	V	1 0	U	V	UG/L	1	100	0
CADMIUM	4 0	U	V	4 0	U	V	4 0	U	V	UG/L	4	10	0
CALCIUM	8110 0		V	12000 0		V	15700 0		V	UG/L	15700		
CESIUM	85 0	U	V	85 0	U	R	63 0	U	V	UG/L	85		
CHROMIUM	5 1	B	V	3 8	B	V	3 0	U	V	UG/L	5 1	50	0
COBALT	4 0	U	V	4 0	U	V	4 0	U	V	UG/L	4		
COPPER	5 4	B	V	2 0	U	V	2 8	B	V	UG/L	5 4	200	0
IRON	36 0	B	V	32 1	U	JA	26 5	B	V	UG/L	36	300	0
LEAD	1 0	U	V	1 0	U	V	1 0	U	V	UG/L	1	50	0
LITHIUM	16 3	B	V	15 3	B	V	13 3	B	V	UG/L	16 3	2500	0
MAGNESIUM	13500 0		V	17500 0		V	13100 0		V	UG/L	17500		
MANGANESE	1 0	B	V	1 0	U	V	1 2	B	V	UG/L	1 2	50	0
MERCURY	0 2	U	V	0 2	U	V	0 2	U	V	UG/L	0 2	2	0
MOLYBDENUM	8 8	U	JA	8 0	U	JA	6 0	U	V	UG/L	8 8	100	0
NICKEL	10 2	B	V	8 0	U	V	8 0	U	V	UG/L	10 2	200	0
POTASSIUM	3450 0	B	V	2950 0	B	V	2690 0	B	V	UG/L	3450		
SELENIUM	4 8	B	V	5 7		V	4 5	B	V	UG/L	5 7	10	0
SILICON	6690 0		V	6640 0		V	6420 0		V	UG/L	6690		
SILVER	2 0	U	V	2 0	U	V	2 0	U	V	UG/L	2	50	0
SODIUM	60200 0		V	56100 0		V	53800 0		V	UG/L	60200		
STRONTIUM	84 5	B	V	137 0	B	V	97 2	B	V	UG/L	137		
THALLIUM	2 0	U	V	2 0	U	V	1 0	U	V	UG/L	2	10	0
TIN	25 0	U	V	25 0	U	V	25 0	U	V	UG/L	25		
VANADIUM	3 0	U	V	3 0	U	V	3 0	U	V	UG/L	3	100	0
ZINC	32 0		V	39 5		V	36 4		V	UG/L	39 5	2000	0

TABLE 11 3 2

IX3 Effl t M tal J ry 1994 M ch 1994

Ch mical	Res It	Qu lif	V l	Re It	Qual f	Val	R It	Qualif	Val	U it Meas	Max Conc	ARAR	# Sam > ARAR
Sampl N mb r	FT10181RG			FT10185RG			FT10198RG						
S m D te	15 Feb 94			23 Feb 94			10 Mar 94						
ALUMINUM	22 9	B	V	21 0	B	V	13 0	U	V	UG/L	22 9	5000	0
ANTIMONY	18 0	U	V	18 0	U	V	18 0	U	V	UG/L	18	60	0
ARSENIC	4 4	U	JA	9 7	B	V	5 5	B	V	UG/L	9 7	50	0
BARIUM	1 0	U	V	1 0	U	V	1 0	U	V	UG/L	1	1000	0
BERYLLIUM	1 0	U	V	1 0	U	V	1 0	U	V	UG/L	1	100	0
CADMIUM	4 0	U	V	4 0	U	V	4 0	U	V	UG/L	4	10	0
CALCIUM	61 6	U	JA	37 0	B	V	493 0	B	V	UG/L	493		
CESIUM	85 0	U	V	85 0	U	JA	63 0	U	V	UG/L	85		
CHROMIUM	5 3	B	V	4 0	B	V	3 0	U	V	UG/L	5 3	50	0
COBALT	4 0	U	V	4 0	U	V	4 0	U	V	UG/L	4		
COPPER	2 1	B	V	2 0	U	V	2 0	U	V	UG/L	2 1	200	0
IRON	40 6	B	V	43 4	U	JA	52 3	B	V	UG/L	52 3	300	0
LEAD	1 0	U	V	1 0	U	V	1 0	U	V	UG/L	1	50	0
LITHIUM	3 3	U	JA	7 7	B	V	1 0	U	V	UG/L	7 7	2500	0
MAGNESIUM	17 0	U	V	17 0	U	V	91 0	B	V	UG/L	91		
MANGANESE	1 0	U	V	1 0	U	V	1 0	U	V	UG/L	1	50	0
MERCURY	0 2	U	V	0 2	U	V	0 2	U	V	UG/L	0 2	2	0
MOLYBDENUM	6 0	U	V	6 0	U	V	6 0	U	V	UG/L	6	100	0
NICKEL	8 0	U	V	8 0	U	V	8 0	U	V	UG/L	8	200	0
POTASSIUM	298 0	U	V	298 0	U	V	298 0	U	V	UG/L	298		
SELENIUM	3 6	BS	V	7 1		V	3 0	BS	V	UG/L	7 1	10	0
SILICON	6550 0		V	6630 0		V	6260 0		V	UG/L	6630		
SILVER	2 0	U	V	2 0	U	V	2 0	U	V	UG/L	2	50	0
SODIUM	5740 0		V	7770 0		V	1930 0	B	V	UG/L	7770		
STRONTIUM	1 0	U	V	1 0	U	V	2 6	B	V	UG/L	2 6		
THALLIUM	2 0	U	V	2 0	U	V	1 0	U	V	UG/L	2	10	0
TIN	25 0	U	V	25 0	U	V	25 0	U	V	UG/L	25		
VANADIUM	3 0	U	V	3 0	U	V	3 0	U	V	UG/L	3	100	0
ZINC	9 0	U	V	9 0	U	V	10 7	B	V	UG/L	10 7	2000	0

TABLE 11 4 1

891 IX2 Effluent Water Quality January 1994 March 1994

Sample Numbe	Sam Date	Chemical	Result	Unit Meas	Qualif	VQual	ARAR	# Sam > ARAR
FT10180RG	15 Feb 94	TOTAL DISSOLVED SOLIDS	260	MG/L		JA	400	0
FT10184RG	23 Feb-94	TOTAL DISSOLVED SOLIDS	280	MG/L		V	400	0
FT10197RG	10 Mar 94	TOTAL DISSOLVED SOLIDS	280	MG/L		V	400	0

891 IX3 Effluent Water Quality January 1994 March 1994

Sample Number	Sam Date	Chemical	Result	Unit Meas	Qualif	VQual	ARAR	# Sam > ARAR
FT10181RG	15-Feb-94	CHLORIDE	110	MG/L		V	250	0
		FLUORIDE	0 8	MG/L		V		
		NITRATE/NITRITE	5 2	MG/L		V	10	0
		SULFATE	44	MG/L		JA	250	0
		TOTAL DISSOLVED SOLIDS	57	MG/L		JA	400	0
		TOTAL SUSPENDED SOLIDS	4	MG/L	U	V		
FT10185RG	23-Feb 94	CHLORIDE	110	MG/L		V	250	0
		FLUORIDE	0 9	MG/L		V		
		NITRATE/NITRITE	6 6	MG/L		V	10	0
		SULFATE	51	MG/L		V	250	0
		TOTAL DISSOLVED SOLIDS	82	MG/L		V	400	0
		TOTAL SUSPENDED SOLIDS	4	MG/L	U	V		
FT10198RG	10-Mar 94	CHLORIDE	120	MG/L		V	250	0
		FLUORIDE	0 9	MG/L		V		
		NITRATE/NITRITE	5 8	MG/L		V	10	0
		SULFATE	48	MG/L		V	250	0
		TOTAL DISSOLVED SOLIDS	27	MG/L		V	400	0
		TOTAL SUSPENDED SOLIDS	4	MG/L	U	V		

TABLE 11 4 2

891 IX4 Effluent Water Quality January 1994 March 1994

Sample Number	Sam Date	Chemical	Result	Unit Meas	Qualif	VQual	ARAR	# Sam > ARAR
FT10182RG	15-Feb-94	BICARBONATE AS CACO3	10	MG/L		V		
		CARBONATE	1	MG/L	U	V		
		CHLORIDE	5	MG/L		V	250	0
		FLUORIDE	0 4	MG/L		V		
		NITRATE/NITRITE	0 14	MG/L		V	10	0
		SULFATE	2	MG/L	U	JA	250	0
		TOTAL DISSOLVED SOLIDS	27	MG/L		JA	400	0
		TOTAL SUSPENDED SOLIDS	4	MG/L	U	V		
FT10186RG	23 Feb-94	BICARBONATE AS CACO3	12	MG/L		V		
		CARBONATE	1	MG/L	U	V		
		CHLORIDE	4	MG/L		V	250	0
		FLUORIDE	1 6	MG/L		V		
		NITRATE/NITRITE	1 1	MG/L		V	10	0
		SULFATE	2	MG/L	U	V	250	0
		TOTAL DISSOLVED SOLIDS	50	MG/L		V	400	0
		TOTAL SUSPENDED SOLIDS	4	MG/L	U	V		
FT10199RG	10-Mar 94	BICARBONATE AS CACO3	4	MG/L		V		
		CARBONATE	4	MG/L		V		
		CHLORIDE	1	MG/L		V	250	0
		FLUORIDE	0 1	MG/L	U	V		
		NITRATE/NITRITE	0 04	MG/L		V	10	0
		SULFATE	2	MG/L	U	V	250	0
		TOTAL DISSOLVED SOLIDS	25	MG/L		V	400	0
		TOTAL SUSPENDED SOLIDS	4	MG/L	U	V		

TABLE 11 5 1

UV PERFORMANCE JANUARY 1994 MARCH 1994 UV INFLUENT

Sample Number	FT10166RG			FT10173RG			FT10193RG			FT 0202RG			FT10204RG						
S m Da e	25-Jan-94			15-F b-94			10-Mar 94			22 Mar 94			22-Mar 94						
Chemical	Result	Qualif	Qual	Result	Qualif	Qual	Result	Qu lif	VQu l	Result	Qualif	Qual	Result	Qualif	Qual	M x Conc	Unit M es	ARAR	S m ARAR
1 1 1 TRICHLOROETHANE	5	U	V	5	U	V	5	U	V	13		V	6		V	13	UG/L	200	0
1 1 2 2 TETRACHLOROETHANE	5	U	V	5	U	V	5	U	V	5	U	V	5	U	V	5	UG/L		
1 1 2 TRICHLOROETHANE	5	U	V	5	U	V	5	U	V	5	U	V	5	U	V	5	UG/L	5	0
1 1 DICHLOROETHANE	5	U	V	5	U	V	5	U	V	5	U	V	5	U	V	5	UG/L	7	0
1 1 DICHLOROETHENE	5	U	V	5	U	V	5	U	V	4	J	A	5	U	V	5	UG/L	5	0
1 2 DICHLOROETHANE	5	U	V	5	U	V	5	U	V	5	U	V	5	U	V	5	UG/L	5	0
1 2 DICHLOROETHENE	5	U	V	5	U	V	5	U	V	3	J	V	5	U	V	5	UG/L		
1 2 DICHLOROPROPANE	5	U	V	5	U	V	5	U	V	5	U	A	5	U	V	5	UG/L		
2 BUTANONE	10	U	V	10	U	R	10	U	R	10	U	V	10	U	V	10	UG/L		
2 HEXANONE	10	U	V	10	U	R	10	U	V	10	U	V	10	U	V	10	UG/L		
4-METHYL 2 PENTANONE	10	U	R	10	U	V	10	U	V	10	U	V	10	U	V	10	UG/L		
CETONE	10	U	R	10	U	R	10	U	V	10	U	V	10	U	V	10	UG/L	50	0
BENZENE	5	U	V	5	U	V	5	U	V	5	U	V	5	U	V	5	UG/L		
BROMODICHLOROMETHANE	5	U	V	5	U	V	5	U	V	5	U	V	5	U	V	5	UG/L		
BROMOFORM	5	U	V	5	U	V	5	U	V	10	U	V	5	U		10	UG/L		
BROMOMETHANE	10	U	V	10	U	V	10	U	V	5	U	V	10	U	V	10	UG/L		
CARBON DISULFIDE	5	U	V	5	U	V	5	U	V	5	U	V	5	U	V	5	UG/L	5	0
CARBON TETRACHLORIDE	9		V	5	U	V	5	U	V	210		V	100		V	210	UG/L	5	3
CHLOROBENZENE	5	U	V	5	U	V	5	U	V	5	U	V	5	U	V	5	UG/L		
CHLOROETHANE	10	U	V	10	U	V	10	U	V	10	U	V	10	U	V	0	UG/L		
CHLOROFORM	4	J		5	U	V	5	U	V	29		V	12		V	29	UG/L		
CHLOROMETHANE	10	U	V	0	U	V	10	U	V	10	U	V	10	U	V	10	UG/L		
DIBROMOCHLOROMETHANE	5	U	V	5	U	V	5	U	V	5	U	V	5	U	V	5	UG/L		
ETHYLBENZENE	5	U	V	5	U	V	5	U	V	5	U	V	5	U	V	5	UG/L		
METHYLENE CHLORIDE	5	U	V	5	U	V	5	U	V	5	U	V	5	U	V	5	UG/L	5	0
STYRENE	5	U	V	5	U	V	5	U	V	5	U	V	5	U	V	5	UG/L		
ETRACHLOROETHENE		J		5	U		5	U		360		V	60		V	360	G/L	5	2
TOLUENE	5	U	V	5	U	V	5	U	V	5	U	V	5	U	V	5	UG/L	2000	0
TOTAL XYLENES	5	U	V	5	U	V	5	U	V	5	U	V	5	U	V	5	UG/L		
TR CHLOROETHENE	5		V	5	U	V	5	U	J	20		V	8		V	20	UG/L	5	2
VINYL ACETATE	10	U	V	10	U	V	0	U	V	10	U	V	10	U	V	10	UG/L		
VINYL CHLORIDE	10	U	V	10	U	V	10	U	V	10	U	V	10	U	V	10	UG/L		
s-1 3-DICHLOROPROPENE	5	U	V	5	U	V	5	U	V	5	U	V	5	U	V	5	UG/L		
trans-1 3-DICHLOROPROPENE	5	U	V	5	U	V	5	U	V	5	U	V	5	U	V	5	UG/L		

TABLE 11 5 2

UV PERFORMANCE JANUARY 1994 MARCH 1994 UV EFFLUENT

S mple Number m	FT10167RG 25-J n-94			FT10174RG 15-F b-94			FT10194RG 10-Mar 94			FT10203RG 22 Mar 94			FT10205RG 22-Mar 94								
hemical	Result	Qu lif	VQual	Result	Qualif	Qual	Result	Qualif	VQual	R sult	Qualif	Qual	Result	Qualif	Qual	M	Conc	Unit M s	RAR	# Sam	RAR
1 1 1 TRICHLOROETHANE	5	U	V	5	U	V	5	U	V	6		V	2	J	A		6	UG/L	200	0	
1 1 2 2 TETRACHLOROETHANE	5	U	V	5	U	V	5	U	V	5	U	V	5	U	V		5	UG/L			
1 1 2 TRICHLOROETHANE	5	U	V	5	U	V	5	U	V	5	U	V	5	U	V		5	UG/L	5	0	
1 1 DICHLOROETHANE	5	U	V	5	U	V	5	U	V	5	U	V	5	U	V		5	UG/L	7	0	
1 1 DICHLOROETHENE	5	U	V	5	U	V	5	U	V	5	U	V	5	U	V		5	UG/L	5	0	
1 2 DICHLOROETHANE	5	U	V	5	U	V	5	U	V	5	U	V	5	U	V		5	UG/L	5	0	
1 2 DICHLOROETHENE	5	U	V	5	U	V	1	J	A	5	U	V	5	U	V		5	UG/L			
1 2 DICHLOROPROP NE	5	U	V	5	U	V	5	U	V	5	U	V	5	U	V		5	UG/L			
2 BUTANONE	10	U	V	10	U	R	10	U	R	10	U	V	10	U	V		10	UG/L			
2 HEXANONE	10	U	V	10	U	R	10	U	V	10	U	V	10	U	V		10	UG/L			
4-METHYL 2 PENTANONE	10	U	R	10	U	V	10	U	V	10	U	V	10	U	V		10	UG/L			
ACETONE	170		J	4	J	A	10	U	V	10	U	V	10	U	V		170	UG/L	50	1	
BENZENE	5	U	V	5	U	V	5	U	V	5	U	V	5	U	V		5	UG/L			
BROMODICHLOROMETHANE	5	U	V	5	U	V	5	U	V	5	U	V	5	U	V		5	UG/L			
BROMOFORM	5	U	V	5	U	V	5	U	V	5	U	V	5	U	V		5	UG/L			
BROMOMETHANE	10	U	V	10	U	V	10	U	V	10	U	V	10	U	V		10	UG/L			
CARBON DISULFIDE	5	U	V	5	U	V	5	U	V	5	U	V	5	U	V		5	UG/L	5	0	
CARBON TETRACHLORIDE	11		V	5	U	V	5	U	V	170		V	75		V		170	UG/L	5	3	
CHLOROBENZENE	5	U	V	5	U	V	5	U	V	5	U	V	5	U	V		5	UG/L			
CHLOROETHANE	10	U	V	10	U	V	10	U	V	10	U	V	10	U	V		10	UG/L			
CHLOROFORM	5		V	5	U	V	5	U	V	12		V	4	J	A		12	UG/L			
CHLOROMETHANE	10	U	V	10	U	V	10	U	V	10	U	V	10	U	V		10	UG/L			
DIBROMOCHLOROMETHANE	5	U	V	5	U	V	5	U	V	5	U	V	5	U	V		5	UG/L			
ETHYLBENZENE	5	U	V	5	U	V	5	U	V	5	U	V	5	U	V		5	UG/L			
METHYLENE CHLOR DE	5	U	V	1	J	A	5	U	V	5	U	V	5	U	V		5	UG/L	5	0	
STYRENE	5	U	V	5	U	V	5	U	V	5	U	V	5	U	V		5	UG/L			
T TRACH OROETH E		U	V	5	U	V	5	U	V	5	U	V	5	U	V		5	UG/L	5	0	
TOLUENE	5	U	V	5	U	V	5	U	V	5	U	V	5	U	V		5	UG/L	2000	0	
TOT L XYLENES	5	U	V	5	U	V	5	U	V	5	U	V	5	U	V		5	UG/L			
TRICHLOROETHENE	5	U	V	5	U	V	5	U	J	5	U	V	5	U	V		5	UG/L	5	0	
VINYL CET TE	10	U	V	10	U	V	10	U	V	10	U	V	10	U	V		10	UG/L			
VINYL CHLORIDE	10	U	V	10	U	V	10	U	V	10	U	V	10	U	V		10	UG/L			
s-1 3-DICHLOROPROPENE	5	U	V	5	U	V	5	U	V	5	U	V	5	U	V		5	UG/L			
ans- 3-DICHLOROPROPENE	5	U	V	5	U	V	5	U	V	5	U	V	5	U	V		5	UG/L			

Peroxide residual is an important factor when evaluating the performance of the UV/peroxide unit Ion exchange resins (particularly anion exchange resins) are subject to breakdown if exposed to peroxide The residual peroxide required at the Building 891 is about 2 ppm The 2 ppm residual is rate limiting and somewhat hinders the ability of the process to effectively destroy organics Therefore a very small residual must be maintained in order to avoid damage to the ion exchange resins

12 0 SUMMARY

Currently all information indicates that both treatment systems in the 891 treatment facility are functioning as expected The UV/peroxide system was tested in March and proven not to handle high levels of carbon tetrachloride based on SVE test water However tetrachloroethene destruction was highly effective as expected The ion exchange system is operating properly in effectively removing cations and anions from the system

Information presented on the influent sources indicates that there has been an increase in VOC detections at the collection well

The groundwater elevation map for April through June 1994 indicates that a large portion of the hillside area remains unsaturated Unsaturated areas appear to remain relatively unchanged from the previous quarter

Well 10492 VOA Jan ary 1994 March 1994

Sampl N mber	Sam Dat	Ch mical	Result	U it M	Qual'f	VQual	ARAR	# S m > ARAR
GW00373GA	10 Ma 94	1 1 1 2 TETRACHLOROETHANE	0 2	UG/L	U	V		
		1 1 1 TRICHLOROETHANE	0 2	UG/L	U	V	200	0
		1 1 2 2 TETRACHLOROETHANE	0 2	UG/L	U	V		
		1 1 2 TRICHLOROETHANE	0 6	UG/L	U	V		
		1 1 DICHLOROETHANE	0 2	UG/L	U	V	5	0
		1 1-DICHLOROETHENE	0 2	UG/L	U	V	7	0
		1 1 DICHLOROPROPENE	0 1	UG/L	U	V		
		1 2 3-TRICHLOROBENZENE	0 2	UG/L	U	V		
		1 2 3-TRICHLOROPROPANE	0 4	UG/L	U	V		
		1 2 4-TRICHLOROBENZENE	0 3	UG/L	U	V		
		1 2 DIBROMOETHANE	0 3	UG/L	U	V		
		1 2 DICHLOROBENZENE	0.2	UG/L	U	V		
		1 2 DICHLOROETHANE	0 4	UG/L	U	V	5	0
		1 2 DICHLOROPROPANE	0 2	UG/L	U	V		
		1 3-DICHLOROBENZENE	0 2	UG/L	U	V		
		1 3 DICHLOROPROPANE	0 2	UG/L	U	V		
		1 4-DICHLOROBENZENE	0 3	UG/L	U	V		
		2 2 DICHLOROPROPANE	0 3	UG/L	U	V		
		4-ISOPROPYLTOLUENE	0 2	UG/L	U	V		
		BENZENE	0 2	UG/L	U	V		
		BENZENE 1 2,4-TRIMETHYL	0.2	UG/L	U	V		
		BENZENE 1 3 5-TRIMETHYL	0.2	UG/L	U	V		
		BROMOBENZENE	0 2	UG/L	U	V		
		BROMOCHLOROMETHANE	0 5	UG/L	U	V		
		BROMODICHLOROMETHANE	0 2	UG/L	U	V		
		BROMOFORM	0 3	UG/L	U	V		
		BROMOMETHANE	0 5	UG/L	U	V		
		CARBON TETRACHLORIDE	0 3	UG/L	U	V	5	0
		CHLOROBENZENE	0 2	UG/L	U	V		
		CHLOROETHANE	0 4	UG/L	U	V		
		CHLOROFORM	0 2	UG/L	U	V		
		CHLOROMETHANE	0 4	UG/L	U	V		
		DIBROMOCHLOROMETHANE	0 2	UG/L	U	V		
		DIBROMOMETHANE	0 3	UG/L	U	V		
		DICHLORODIFLUOROMETHANE	0 2	UG/L	U	V		
		ETHYLBENZENE	0 2	UG/L	U	V		
		HEXACHLOROBUTADIENE	0 2	UG/L	U	V		
		ISOPROPYLBENZENE	0 2	UG/L	U	V		
		METHYLENE CHLORIDE	0 2	UG/L	U	V	5	0
		NAPHTHALENE	0 2	UG/L	U	V		
		PROPANE 1 2-DIBROMO-3-CHLORO-	0 4	UG/L	U	R		
		STYRENE	0 2	UG/L	U	V		
		TETRACHLOROETHENE	0 2	UG/L	U	V	5	0
		TOLUENE	0 2	UG/L	U	V	2000	0
		TRICHLOROETHENE	0 2	UG/L	U	V	5	0
		TRICHLOROFLUOROMETHANE	0 3	UG/L	U	V		
		VINYL CHLORIDE	0 2	UG/L	U	V		
		cis-1 2 DICHLOROETHENE	0 2	UG/L	U	V		
		cis-1 3-DICHLOROPROPENE	0 2	UG/L	U	V		
		m p XYLENE	0 3	UG/L	U	V		
		n-BUTYLBENZENE	0 2	UG/L	U	V		
		n PROPYLBENZENE	0 2	UG/L	U	V		
		o-CHLOROTOLUENE	0 3	UG/L	U	V		
		o-XYLENE	0 2	UG/L	U	V		
		p-CHLOROTOLUENE	0 2	UG/L	U	V		
		sec-BUTYLBENZENE	0 2	UG/L	U	V		
		tert BUTYLBENZENE	0 2	UG/L	U	V		
		tra s-1 2 DICHLOROETHENE	0 2	UG/L	U	V		
		trans-1 3 DICHLOROPROPENE	0 4	UG/L	U	V		

Well 10592 VOA Jan ary 1994 Mar h 1994

S mpl N mber	S m Dat	Ch mical	R sult	U it M as	Q	I'f	VQual	ARAR	# S m > ARAR
GW00374GA	3-M 94	1 1 1 2 TETRACHLOROETHANE	0 2	UG/L	U		V		
		1 1 1 TRICHLOROETHANE	0 2	UG/L	U		V	200	0
		1 1 2 2 TETRACHLOROETHANE	0 2	UG/L	U		V		
		1 1 2 TRICHLOROETHANE	0 6	UG/L	U		V		
		1 1-DICHLOROETHANE	0 2	UG/L	U		V	5	0
		1 1 DICHLOROETHENE	0 2	UG/L	U		V	7	0
		1 1 DICHLOROPROPENE	0 1	UG/L	U		V		
		1 2 3-TRICHLOROBENZENE	0 2	UG/L	U		V		
		1 2 3-TRICHLOROPROPANE	0 4	UG/L	U		V		
		1 2 4-TRICHLOROBENZENE	0 3	UG/L	U		V		
		1 2 DIBROMOETHANE	0 3	UG/L	U		V		
		1 2 DICHLOROBENZENE	0 2	UG/L	U		V		
		1 2 DICHLOROETHANE	0 4	UG/L	U		V	5	0
		1 2 DICHLOROPROPANE	0 2	UG/L	U		V		
		1 3 DICHLOROBENZENE	0 2	UG/L	U		V		
		1 3-DICHLOROPROPANE	0 2	UG/L	U		V		
		1 4-DICHLOROBENZENE	0 3	UG/L	U		V		
		2 2 DICHLOROPROPANE	0 3	UG/L	U		V		
		4-ISOPROPYLTOLUENE	0 2	UG/L	U		V		
		BENZENE	0 2	UG/L	U		V		
		BENZENE 1 2 4-TRIMETHYL	0 2	UG/L	U		V		
		BENZENE 1 3 5-TRIMETHYL	0 2	UG/L	U		V		
		BROMOBENZENE	0 2	UG/L	U		V		
		BROMOCHLOROMETHANE	0 5	UG/L	U		V		
		BROMODICHLOROMETHANE	0 2	UG/L	U		V		
		BROMOFORM	0 3	UG/L	U		V		
		BROMOMETHANE	0 5	UG/L	U		V		
		CARBON TETRACHLORIDE	0 3	UG/L	U		V	5	0
		CHLOROBENZENE	0 2	UG/L	U		V		
		CHLOROETHANE	0 4	UG/L	U		V		
		CHLOROFORM	0 2	UG/L	U		V		
		CHLOROMETHANE	0 4	UG/L	U		V		
		DIBROMOCHLOROMETHANE	0 2	UG/L	U		V		
		DIBROMOMETHANE	0 3	UG/L	U		V		
		DICHLORODIFLUOROMETHANE	0 2	UG/L	U		V		
		ETHYLBENZENE	0.2	UG/L	U		V		
		HEXACHLOROBUTADIENE	0.2	UG/L	U		V		
		ISOPROPYLBENZENE	0 2	UG/L	U		V		
		METHYLENE CHLORIDE	0 2	UG/L	U		V	5	0
		NAPHTHALENE	0 2	UG/L	U		V		
		PROPANE 1 2-DIBROMO-3-CHLORO-	0 4	UG/L	U		R		
		STYRENE	0 2	UG/L	U		V		
		TETRACHLOROETHENE	0 2	UG/L	U		V	5	0
		TOLUENE	0 2	UG/L	U		V	2000	0
		TRICHLOROETHENE	0 2	UG/L	U		V	5	0
		TRICHLOROFLUOROMETHANE	0 3	UG/L	U		V		
		VINYL CHLORIDE	0 2	UG/L	U		V		
		cis-1 2 DICHLOROETHENE	0 2	UG/L	U		V		
		cis-1 3-DICHLOROPROPENE	0 2	UG/L	U		V		
		m p XYLENE	0 3	UG/L	U		V		
		n-BUTYLBENZENE	0 2	UG/L	U		V		
		n-PROPYLBENZENE	0 2	UG/L	U		V		
		o-CHLOROTOLUENE	0 3	UG/L	U		V		
		o-XYLENE	0 2	UG/L	U		V		
		p-CHLOROTOLUENE	0 2	UG/L	U		V		
		sec-BUTYLBENZENE	0 2	UG/L	U		V		
		tert BUTYLBENZENE	0 2	UG/L	U		V		
		tra s-1 2 DICHLOROETHENE	0 2	UG/L	U		V		
		trans-1 3-DICHLOROPROPENE	0 4	UG/L	U		V		

W ll 10692 VOA January 1994 M ch 1994

S mple Number	S m D t	Chemical	R	lt	Unit Mea	Q alif	VQual	ARAR	# S m > ARAR
GW00375GA	10 Ma 94	1 1 1 2 TETRACHLOROETHANE		0 2	UG/L	U	V		
		1 1 1 TRICHLOROETHANE		0 2	UG/L	U	V	200	0
		1 1 2 2 TETRACHLOROETHANE		0 2	UG/L	U	V		
		1 1 2 TRICHLOROETHANE		0 6	UG/L	U	V		
		1 1 DICHLOROETHANE		0 2	UG/L	U	V	5	0
		1 1 DICHLOROETHENE		0 2	UG/L	U	V	7	0
		1 1 DICHLOROPROPENE		0 1	UG/L	U	V		
		1 2 3-TRICHLOROBENZENE		0 2	UG/L	U	V		
		1 2 3-TRICHLOROPROPANE		0 4	UG/L	U	V		
		1 2 4-TRICHLOROBENZENE		0 3	UG/L	U	V		
		1 2 DIBROMOETHANE		0 3	UG/L	U	V		
		1 2-DICHLOROBENZENE		0 2	UG/L	U	V		
		1 2 DICHLOROETHANE		0 4	UG/L	U	V	5	0
		1 2 DICHLOROPROPANE		0 2	UG/L	U	V		
		1 3-DICHLOROBENZENE		0 2	UG/L	U	V		
		1 3 DICHLOROPROPANE		0 2	UG/L	U	V		
		1 4 DICHLOROBENZENE		0 3	UG/L	U	V		
		2 2 DICHLOROPROPANE		0 3	UG/L	U	V		
		4-ISOPROPYLTOLUENE		0 2	UG/L	U	V		
		BENZENE		0 2	UG/L	U	V		
		BENZENE 1 2 4-TRIMETHYL		0 2	UG/L	U	V		
		BENZENE 1 3 5-TRIMETHYL		0 2	UG/L	U	V		
		BROMOBENZENE		0 2	UG/L	U	V		
		BROMOCHLOROMETHANE		0 5	UG/L	U	V		
		BROMODICHLOROMETHANE		0 2	UG/L	U	V		
		BROMOFORM		0 3	UG/L	U	V		
		BROMOMETHANE		0 5	UG/L	U	V		
		CARBON TETRACHLORIDE		0 3	UG/L	U	V	5	0
		CHLOROBENZENE		0 2	UG/L	U	V		
		CHLOROETHANE		0 4	UG/L	U	V		
		CHLOROFORM		0 2	UG/L	U	V		
		CHLOROMETHANE		0 4	UG/L	U	V		
		DIBROMOCHLOROMETHANE		0 2	UG/L	U	V		
		DIBROMOMETHANE		0 3	UG/L	U	V		
		DICHLORODIFLUOROMETHANE		0 2	UG/L	U	V		
		ETHYLBENZENE		0 2	UG/L	U	V		
		HEXACHLOROBUTADIENE		0 2	UG/L	U	V		
		ISOPROPYLBENZENE		0 2	UG/L	U	V		
		METHYLENE CHLORIDE		0 2	UG/L	U	V	5	0
		NAPHTHALENE		0 2	UG/L	U	V		
		PROPANE 1 2 DIBROMO-3-CHLORO		0 4	UG/L	U	R		
		STYRENE		0 2	UG/L	U	V		
		TETRACHLOROETHENE		0 2	UG/L	U	V	5	0
		TOLUENE		0 2	UG/L	U	V	2000	0
		TRICHLOROETHENE		0 2	UG/L	U	V	5	0
		TRICHLOROFLUOROMETHANE		0 3	UG/L	U	V		
		VINYL CHLORIDE		0 2	UG/L	U	V		
		cis-1 2 DICHLOROETHENE		0 2	UG/L	U	V		
		cis-1 3-DICHLOROPROPENE		0 2	UG/L	U	V		
		m p XYLENE		0 3	UG/L	U	V		
		n-BUTYLBENZENE		0 2	UG/L	U	V		
		n-PROPYLBENZENE		0 2	UG/L	U	V		
		o-CHLOROTOLUENE		0 3	UG/L	U	V		
		o-XYLENE		0 2	UG/L	U	V		
		p-CHLOROTOLUENE		0 2	UG/L	U	V		
		sec-BUTYLBENZENE		0 2	UG/L	U	V		
		tert BUTYLBENZENE		0 2	UG/L	U	V		
		trans-1 2 DICHLOROETHENE		0 2	UG/L	U	V		
		trans-1 3 DICHLOROPROPENE		0 4	UG/L	U	V		

Well 10792 VOA J uary 1994 March 1994

S mpl N mber	S m Dat	Chemical	Result	Unit Mea	Qualif	VQual	ARAR	# S m > ARAR
GW00376GA	10-Mar 94	1 1 1 2 TETRACHLOROETHANE	0 2	UG/L	U	V		
		1 1 1 TRICHLOROETHANE	0 2	UG/L	U	V	200	0
		1 1 2 2 TETRACHLOROETHANE	0 2	UG/L	U	V		
		1 1 2 TRICHLOROETHANE	0 6	UG/L	U	V		
		1 1 DICHLOROETHANE	0 2	UG/L	U	V	5	0
		1 1 DICHLOROETHENE	0 2	UG/L	U	V	7	0
		1 1 DICHLOROPROPENE	0 1	UG/L	U	V		
		1 2 3-TRICHLOROBENZENE	0 2	UG/L	U	V		
		1 2 3-TRICHLOROPROPANE	0 4	UG/L	U	V		
		1 2 4-TRICHLOROBENZENE	0 3	UG/L	U	V		
		1 2 DIBROMOETHANE	0 3	UG/L	U	V		
		1 2 DICHLOROBENZENE	0 2	UG/L	U	V		
		1 2 DICHLOROETHANE	0 4	UG/L	U	V	5	0
		1 2 DICHLOROPROPANE	0 2	UG/L	U	V		
		1 3 DICHLOROBENZENE	0 2	UG/L	U	V		
		1 3 DICHLOROPROPANE	0 2	UG/L	U	V		
		1 4-DICHLOROBENZENE	0 3	UG/L	U	V		
		2 2 DICHLOROPROPANE	0 3	UG/L	U	V		
		4-ISOPROPYLTOLUENE	0 2	UG/L	U	V		
		BENZENE	0 2	UG/L	U	V		
		BENZENE 1 2 4-TRIMETHYL	0 2	UG/L	U	V		
		BENZENE 1 3 5-TRIMETHYL	0 2	UG/L	U	V		
		BICYCLO(4 1 0)HEPT-3-ENE 3 7	0 81	UG/L	J	Z		
		BROMOBENZENE	0 2	UG/L	U	V		
		BROMOCHLOROMETHANE	0 5	UG/L	U	V		
		BROMODICHLOROMETHANE	0 2	UG/L	U	V		
		BROMOFORM	0 3	UG/L	U	V		
		BROMOMETHANE	0 5	UG/L	U	V		
		CARBON TETRACHLORIDE	0 3	UG/L	U	V	5	0
		CHLOROBENZENE	0 2	UG/L	U	V		
		CHLOROETHANE	0 4	UG/L	U	V		
		CHLOROFORM	0 1	UG/L	J	A		
		CHLOROMETHANE	0 4	UG/L	U	V		
		DIBROMOCHLOROMETHANE	0 2	UG/L	U	V		
		DIBROMOMETHANE	0 3	UG/L	U	V		
		DICHLORODIFLUOROMETHANE	0 2	UG/L	U	V		
		ETHYLBENZENE	0 2	UG/L	U	V		
		HEXACHLOROBUTADIENE	0 2	UG/L	U	V		
		ISOPROPYLBENZENE	0 2	UG/L	U	V		
		METHYLENE CHLORIDE	0 2	UG/L	U	V	5	0
		NAPHTHALENE	0 2	UG/L	U	V		
		PROPANE 1 2-DIBROMO-3-CHLORO-	0 4	UG/L	U	R		
		STYRENE	0 2	UG/L	U	V		
		TETRACHLOROETHENE	0 8	UG/L		V	5	0
		TOLUENE	3	UG/L		V	2000	0
		TRICHLOROETHENE	0 2	UG/L	U	V	5	0
		TRICHLOROFLUOROMETHANE	0 3	UG/L	U	V		
		VINYL CHLORIDE	0 2	UG/L	U	V		
		cis 1 2 DICHLOROETHENE	0 2	UG/L	U	V		
		cis-1 3-DICHLOROPROPENE	0 2	UG/L	U	V		
		m p XYLENE	0 3	UG/L	U	V		
		BUTYLBENZENE	0 2	UG/L	U	V		
		n PROPYLBENZENE	0 2	UG/L	U	V		
		o-CHLOROTOLUENE	0 3	UG/L	U	V		
		o-XYLENE	0 2	UG/L	U	V		
		p-CHLOROTOLUENE	0 2	UG/L	U	V		
		sec-BUTYLBENZENE	0 2	UG/L	U	V		
		tert BUTYLBENZENE	0 2	UG/L	U	V		
		trans-1 2 DICHLOROETHENE	0 2	UG/L	U	V		
		tra s 1 3-DICHLOROPROPENE	0 4	UG/L	U	V		

Well 10992 VOA Janu ry 1994 M ch 1994

S mple N mbe	S m D t	Chemi l	Res it	U it M as	Qualif	VQual	ARAR	# Sam > ARAR
GW00377GA	10-M 94	1 1 1 2 TETRACHLOROETHANE	0 2	UG/L	U	V		
		1 1 1 TRICHLOROETHANE	0 2	UG/L	U	V	200	0
		1 1 2 2 TETRACHLOROETHANE	0 2	UG/L	U	V		
		1 1 2 TRICHLOROETHANE	0 6	UG/L	U	V		
		1 1-DICHLOROETHANE	0 2	UG/L	U	V	5	0
		1 1 DICHLOROETHENE	0 2	UG/L	U	V	7	0
		1 1 DICHLOROPROPENE	0 1	UG/L	U	V		
		1 2 3-TRICHLOROBENZENE	0 2	UG/L	U	V		
		1 2 3-TRICHLOROPROPANE	0 4	UG/L	U	V		
		1 2 4-TRICHLOROBENZENE	0 3	UG/L	U	V		
		1 2 DIBROMOETHANE	0 3	UG/L	U	V		
		1 2 DICHLOROBENZENE	0 2	UG/L	U	V		
		1 2 DICHLOROETHANE	0 4	UG/L	U	V	5	0
		1 2 DICHLOROPROPANE	0 2	UG/L	U	V		
		1 3-DICHLOROBENZENE	0 2	UG/L	U	V		
		1 3-DICHLOROPROPANE	0 2	UG/L	U	V		
		1 4-DICHLOROBENZENE	0 3	UG/L	U	V		
		2 2 DICHLOROPROPANE	0 3	UG/L	U	V		
		4-ISOPROPYLTOLUENE	0 2	UG/L	U	V		
		BENZENE	0 2	UG/L	U	V		
		BENZENE 1 2 4-TRIMETHYL	0 2	UG/L	U	V		
		BENZENE 1 3 5-TRIMETHYL	0 2	UG/L	U	V		
		BROMOBENZENE	0 2	UG/L	U	V		
		BROMOCHLOROMETHANE	0 5	UG/L	U	V		
		BROMODICHLOROMETHANE	0 2	UG/L	U	V		
		BROMOFORM	0 3	UG/L	U	V		
		BROMOMETHANE	0 5	UG/L	U	V		
		CARBON TETRACHLORIDE	0 3	UG/L	U	V	5	0
		CHLOROBENZENE	0 2	UG/L	U	V		
		CHLOROETHANE	0 4	UG/L	U	V		
		CHLOROFORM	0 2	UG/L	U	V		
		CHLOROMETHANE	0 4	UG/L	U	V		
		DIBROMOCHLOROMETHANE	0 2	UG/L	U	V		
		DIBROMOMETHANE	0 3	UG/L	U	V		
		DICHLORODIFLUOROMETHANE	0 2	UG/L	U	V		
		ETHYLBENZENE	0 2	UG/L	U	V		
		HEXACHLOROBUTADIENE	0 2	UG/L	U	V		
		ISOPROPYLBENZENE	0 2	UG/L	U	V		
		METHYLENE CHLORIDE	0 2	UG/L	U	V	5	0
		NAPHTHALENE	0 2	UG/L	U	V		
		PROPANE 1 2 DIBROMO-3-CHLORO-	0 4	UG/L	U	R		
		STYRENE	0 2	UG/L	U	V		
		TETRACHLOROETHENE	0 2	UG/L	U	V	5	0
		TOLUENE	0 2	UG/L	U	V	2000	0
		TRICHLOROETHENE	0 2	UG/L	U	V	5	0
		TRICHLOROFLUOROMETHANE	0 3	UG/L	U	V		
		VINYL CHLORIDE	0 2	UG/L	U	V		
		cis-1 2 DICHLOROETHENE	0 2	UG/L	U	V		
		cis-1 3 DICHLOROPROPENE	0 2	UG/L	U	V		
		m p XYLENE	0 3	UG/L	U	V		
		n BUTYLBENZENE	0 2	UG/L	U	V		
		n PROPYLBENZENE	0 2	UG/L	U	V		
		o-CHLOROTOLUENE	0 3	UG/L	U	V		
		o-XYLENE	0 2	UG/L	U	V		
		p-CHLOROTOLUENE	0 2	UG/L	U	V		
		sec-BUTYLBENZENE	0 2	UG/L	U	V		
		tert BUTYLBENZENE	0 2	UG/L	U	V		
		trans-1 2 DICHLOROETHENE	0 2	UG/L	U	V		
		tra s-1 3-DICHLOROPROPENE	0 4	UG/L	U	V		

Well 11092 VOA J nuary 1994 M h 1994

S mple N mber	S m D t	Chemical	R sult	U it M	Qualif	VQual	ARAR	# S m > ARAR
GW00235GA	17 Feb-94	1 1 1 2 TETRACHLOROETHANE	0 2	UG/L	U	V		
		1 1 1 TRICHLOROETHANE	0 2	UG/L	U	V	200	0
		1 1 2 2 TETRACHLOROETHANE	0 2	UG/L	U	V		
		1 1 2 TRICHLOROETHANE	0 6	UG/L	U	V		
		1 1 DICHLOROETHANE	0 2	UG/L	U	V	5	0
		1 1 DICHLOROETHENE	0 2	UG/L	U	V	7	0
		1 1 DICHLOROPROPENE	0 1	UG/L	U	V		
		1 2 3-TRICHLOROBENZENE	0 2	UG/L	U	J		
		1 2 3-TRICHLOROPROPANE	0 4	UG/L	U	V		
		1 2 4-TRICHLOROBENZENE	0 1	UG/L	JX	A		
		1 2-DIBROMOETHANE	0 3	UG/L	U	V		
		1 2 DICHLOROBENZENE	0 2	UG/L	U	V		
		1 2 DICHLOROETHANE	0 4	UG/L	U	V	5	0
		1 2 DICHLOROPROPANE	0 2	UG/L	U	V		
		1 3-DICHLOROBENZENE	0 2	UG/L	U	V		
		1 3-DICHLOROPROPANE	0 2	UG/L	U	V		
		1 4-DICHLOROBENZENE	0 3	UG/L	U	V		
		2 2 DICHLOROPROPANE	0 3	UG/L	U	V		
		4-ISOPROPYLTOLUENE	0 2	UG/L	U	V		
		BENZENE	0 2	UG/L	U	V		
		BENZENE 1 2 4-TRIMETHYL	0 2	UG/L	U	V		
		BENZENE 1 3 5-TRIMETHYL	0 2	UG/L	U	V		
		BROMOBENZENE	0 2	UG/L	U	J		
		BROMOCHLOROMETHANE	0 5	UG/L	U	V		
		BROMODICHLOROMETHANE	0 2	UG/L	U	V		
		BROMOFORM	0 3	UG/L	U	V		
		BROMOMETHANE	0 5	UG/L	U	V		
		CARBON TETRACHLORIDE	0 3	UG/L	U	V	5	0
		CHLOROBENZENE	0 2	UG/L	U	V		
		CHLOROETHANE	0 4	UG/L	U	V		
		CHLOROFORM	0 2	UG/L	U	V		
		CHLOROMETHANE	0 4	UG/L	U	V		
		DIBROMOCHLOROMETHANE	0 2	UG/L	U	V		
		DIBROMOMETHANE	0 3	UG/L	U	V		
		DICHLORODIFLUOROMETHANE	0 2	UG/L	U	V		
		ETHYLBENZENE	0 2	UG/L	U	V		
		HEXACHLOROBUTADIENE	0 2	UG/L	U	J		
		ISOPROPYLBENZENE	0 2	UG/L	U	V		
		METHYLENE CHLORIDE	0 2	UG/L	U	V	5	0
		NAPHTHALENE	0 2	UG/L	U	J		
		PROPANE 1 2 DIBROMO-3-CHLORO-	0 4	UG/L	U	R		
		STYRENE	0 2	UG/L	U	V		
		TETRACHLOROETHENE	0 2	UG/L	U	V	5	0
		TOLUENE	0 2	UG/L	U	V	2000	0
		TRICHLOROETHENE	0 2	UG/L	U	V	5	0
		TRICHLOROFLUOROMETHANE	0 4	UG/L		V		
		UNKNOWN	0 13	UG/L	J	Z		
		VINYL CHLORIDE	0 2	UG/L	U	J		
		cis-1 2 DICHLOROETHENE	0 2	UG/L	U	V		
		cis-1 3-DICHLOROPROPENE	0 2	UG/L	U	V		
		m p XYLENE	0 3	UG/L	U	V		
		n BUTYLBENZENE	0 2	UG/L	U	V		
		n-PROPYLBENZENE	0 2	UG/L	U	J		
		o-CHLOROTOLUENE	0 3	UG/L	U	V		
		o-XYLENE	0 2	UG/L	U	V		
		p-CHLOROTOLUENE	0 2	UG/L	U	V		
		sec-BUTYLBENZENE	0 2	UG/L	U	V		
		tert BUTYLBENZENE	0 2	UG/L	U	V		
		trans-1 2 DICHLOROETHENE	0 2	UG/L	U	V		
		tra s 1 3 DICHLOROPROPENE	0 4	UG/L	U	J		

W ll 31491 VOA J ry 1994 M h 1994

S mpl N mbe	S m D t	Ch mi al	Result	U it M	Qualif	VQu l	ARAR	# S m > ARAR
GW00370GA	9-Ma 94	1 1 1 2 TETRACHLOROETHANE	0 2	UG/L	U	V		
		1 1 1 TRICHLOROETHANE	0 2	UG/L	U	V	200	0
		1 1 2 2 TETRACHLOROETHANE	0 2	UG/L	U	V		
		1 1 2 TRICHLOROETHANE	0 6	UG/L	U	V		
		1 1 DICHLOROETHANE	0 2	UG/L	U	V	5	0
		1 1-DICHLOROETHENE	0 2	UG/L	U	V	7	0
		1 1 DICHLOROPROPENE	0 1	UG/L	U	V		
		1 2 3-TRICHLOROBENZENE	0 2	UG/L	U	V		
		1 2 3-TRICHLOROPROPANE	0 4	UG/L	U	V		
		1 2 4-TRICHLOROBENZENE	0 3	UG/L	U	V		
		1 2 DIBROMOETHANE	0 3	UG/L	U	V		
		1 2 DICHLOROBENZENE	0 2	UG/L	U	V		
		1 2 DICHLOROETHANE	0 4	UG/L	U	V	5	0
		1 2 DICHLOROPROPANE	0 2	UG/L	U	V		
		1 3 DICHLOROBENZENE	0 2	UG/L	U	V		
		1 3 DICHLOROPROPANE	0 2	UG/L	U	V		
		1 4-DICHLOROBENZENE	0 3	UG/L	U	V		
		2 2 DICHLOROPROPANE	0 3	UG/L	U	V		
		4-ISOPROPYLTOLUENE	0 2	UG/L	U	V		
		BENZENE	0 2	UG/L	U	V		
		BENZENE 1 2 4-TRIMETHYL	0 2	UG/L	U	V		
		BENZENE 1 3 5-TRIMETHYL	0 2	UG/L	U	V		
		BROMOBENZENE	0 2	UG/L	U	V		
		BROMOCHLOROMETHANE	0 5	UG/L	U	V		
		BROMODICHLOROMETHANE	0 2	UG/L	U	V		
		BROMOFORM	0 3	UG/L	U	V		
		BROMOMETHANE	0 5	UG/L	U	V		
		CARBON TETRACHLORIDE	0 3	UG/L	U	V	5	0
		CHLOROBENZENE	0 2	UG/L	U	V		
		CHLOROETHANE	0 4	UG/L	U	V		
		CHLOROFORM	0 2	UG/L	U	V		
		CHLOROMETHANE	0 4	UG/L	U	V		
		DIBROMOCHLOROMETHANE	0 2	UG/L	U	V		
		DIBROMOMETHANE	0 3	UG/L	U	V		
		DICHLORODIFLUOROMETHANE	0 2	UG/L	U	V		
		ETHYLBENZENE	0 2	UG/L	U	V		
		HEXACHLOROBUTADIENE	0 2	UG/L	U	V		
		ISOPROPYLBENZENE	0 2	UG/L	U	V		
		METHYLENE CHLORIDE	0 2	UG/L	U	V	5	0
		NAPHTHALENE	0 2	UG/L	U	V		
		PROPANE 1 2 DIBROMO-3-CHLORO	0 4	UG/L	U	R		
		STYRENE	0 2	UG/L	U	V		
		TETRACHLOROETHENE	0 5	UG/L		V	5	0
		TOLUENE	0 2	UG/L	U	V	2000	0
		TRICHLOROETHENE	0 2	UG/L	U	V	5	0
		TRICHLOROFLUOROMETHANE	0 3	UG/L	U	V		
		VINYL CHLORIDE	0 2	UG/L	U	V		
		cis-1 2 DICHLOROETHENE	0 2	UG/L	U	V		
		cis 1 3-DICHLOROPROPENE	0 2	UG/L	U	V		
		m p XYLENE	0 3	UG/L	U	V		
		n-BUTYLBENZENE	0 2	UG/L	U	V		
		n-PROPYLBENZENE	0 2	UG/L	U	V		
		o-CHLOROTOLUENE	0 3	UG/L	U	V		
		o-XYLENE	0 2	UG/L	U	V		
		p-CHLOROTOLUENE	0 2	UG/L	U	V		
		sec-BUTYLBENZENE	0 2	UG/L	U	V		
		tert BUTYLBENZENE	0 2	UG/L	U	V		
		tra s-1 2 DICHLOROETHENE	0 2	UG/L	U	V		
		tra s-1 3 DICHLOROPROPENE	0 4	UG/L	U	V		

Well 35691 VOA J ry 1994 M h 1994

S mpl N mber	S m D t	Ch mical	Result	Unit M	Qual'f	VQual	ARAR	# S m > ARAR
GW00333GA	8-Mar 94	1 1 1 2 TETRACHLOROETHANE	0 2	UG/L	U	V		
		1 1 1 TRICHLOROETHANE	0 2	UG/L	U	V	200	0
		1 1 2 2 TETRACHLOROETHANE	0 2	UG/L	U	V		
		1 1 2 TRICHLOROETHANE	0 6	UG/L	U	V		
		1 1 DICHLOROETHANE	0 2	UG/L	U	V	5	0
		1 1 DICHLOROETHENE	0 2	UG/L	U	V	7	0
		1 1 DICHLOROPROPENE	0 1	UG/L	U	V		
		1 2 3 TRICHLOROBENZENE	0 2	UG/L	U	V		
		1 2 3-TRICHLOROPROPANE	0 4	UG/L	U	V		
		1 2 4-TRICHLOROBENZENE	0 3	UG/L	U	V		
		1 2 DIBROMOETHANE	0 3	UG/L	U	V		
		1 2 DICHLOROBENZENE	0 2	UG/L	U	V		
		1 2 DICHLOROETHANE	0 4	UG/L	U	V	5	0
		1 2 DICHLOROPROPANE	0 2	UG/L	U	V		
		1 3-DICHLOROBENZENE	0 2	UG/L	U	V		
		1 3-DICHLOROPROPANE	0 2	UG/L	U	V		
		1 4-DICHLOROBENZENE	0 3	UG/L	U	V		
		2 2 DICHLOROPROPANE	0 3	UG/L	U	V		
		4-ISOPROPYLTOLUENE	0 2	UG/L	U	V		
		BENZENE	0 2	UG/L	U	V		
		BENZENE 1 2 4-TRIMETHYL	0 2	UG/L	U	V		
		BENZENE 1 3 5-TRIMETHYL	0 2	UG/L	U	V		
		BROMOBENZENE	0 2	UG/L	U	V		
		BROMOCHLOROMETHANE	0 5	UG/L	U	V		
		BROMODICHLOROMETHANE	0 2	UG/L	U	V		
		BROMOFORM	0 3	UG/L	U	V		
		BROMOMETHANE	0 5	UG/L	U	V		
		CARBON TETRACHLORIDE	0 3	UG/L	U	V	5	0
		CHLOROBENZENE	0 2	UG/L	U	V		
		CHLOROETHANE	0 4	UG/L	U	V		
		CHLOROFORM	0 2	UG/L	U	V		
		CHLOROMETHANE	0 4	UG/L	U	V		
		DIBROMOCHLOROMETHANE	0 2	UG/L	U	V		
		DIBROMOMETHANE	0 3	UG/L	U	V		
		DICHLORODIFLUOROMETHANE	0 2	UG/L	U	V		
		ETHYLBENZENE	0 2	UG/L	U	V		
		HEXACHLOROBUTADIENE	0 2	UG/L	U	V		
		ISOPROPYLBENZENE	0 2	UG/L	U	V		
		METHYLENE CHLORIDE	0 2	UG/L	U	V	5	0
		NAPHTHALENE	0 2	UG/L	U	V		
		PROPANE 1 2 DIBROMO-3-CHLORO-	0 4	UG/L	U	R		
		STYRENE	0 2	UG/L	U	V		
		TETRACHLOROETHENE	0 2	UG/L	U	V	5	0
		TOLUENE	0 2	UG/L	U	V	2000	0
		TRICHLOROETHENE	0 2	UG/L	U	V	5	0
		TRICHLOROFLUOROMETHANE	0 3	UG/L	U	V		
		VINYL CHLORIDE	0 2	UG/L	U	V		
		cis-1 2 DICHLOROETHENE	0 2	UG/L	U	V		
		cis-1 3-DICHLOROPROPENE	0 2	UG/L	U	V		
		m p XYLENE	0 3	UG/L	U	V		
		n-BUTYLBENZENE	0 2	UG/L	U	V		
		n-PROPYLBENZENE	0 2	UG/L	U	V		
		o-CHLOROTOLUENE	0 3	UG/L	U	V		
		o-XYLENE	0 2	UG/L	U	V		
		p-CHLOROTOLUENE	0 2	UG/L	U	V		
		sec-BUTYLBENZENE	0 2	UG/L	U	V		
		tert BUTYLBENZENE	0 2	UG/L	U	V		
		tra s-1 2-DICHLOROETHENE	0 2	UG/L	U	V		
		trans-1 3 DICHLOROPROPENE	0 4	UG/L	U	V		

W ll 45391 VOA Jan ry 1994 March 1994

Sampl Number	S m D t	Chemical	Result	Unit M	Qual'f	VQual	ARAR	# S m > ARAR
GW00456GA	24-Ma 94	1 1 1 2 TETRACHLOROETHANE	0 2	UG/L	U	V	200	0
		1 1 1 TRICHLOROETHANE	0 2	UG/L	U	V		
		1 1 2 2 TETRACHLOROETHANE	0 2	UG/L	U	V		
		1 1 2 TRICHLOROETHANE	0 6	UG/L	U	V	5	0
		1 1-DICHLOROETHANE	0 2	UG/L	U	V	7	0
		1 1 DICHLOROETHENE	0 2	UG/L	U	V	5	0
		1 1 DICHLOROPROPENE	0 1	UG/L	U	V		
		1 2 3-TRICHLOROBENZENE	0 2	UG/L	U	V		
		1 2 3 TRICHLOROPROPANE	0 4	UG/L	U	V		
		1 2 4-TRICHLOROBENZENE	0 3	UG/L	U	V		
		1 2 DIBROMOETHANE	0 3	UG/L	U	V		
		1 2 DICHLOROBENZENE	0 2	UG/L	U	V		
		1 2 DICHLOROETHANE	0 4	UG/L	U	V	5	0
		1 2 DICHLOROPROPANE	0 2	UG/L	U	V		
		1 3-DICHLOROBENZENE	0 2	UG/L	U	V		
		1 3-DICHLOROPROPANE	0 2	UG/L	U	V		
		1 4-DICHLOROBENZENE	0 3	UG/L	U	V		
		2 2 DICHLOROPROPANE	0 3	UG/L	U	V		
		4-ISOPROPYLTOLUENE	0 2	UG/L	U	V		
		BENZENE	0 2	UG/L	U	V		
		BENZENE 1 2 4-TRIMETHYL	0 2	UG/L	U	V		
		BENZENE 1 3 5-TRIMETHYL	0 2	UG/L	U	V		
		BROMOBENZENE	0 2	UG/L	U	V		
		BROMOCHLOROMETHANE	0 5	UG/L	U	V		
		BROMODICHLOROMETHANE	0 2	UG/L	U	V		
		BROMOFORM	0 3	UG/L	U	V		
		BROMOMETHANE	0 5	UG/L	U	V		
		CARBON TETRACHLORIDE	0 3	UG/L	U	V	5	0
		CHLOROBENZENE	0 2	UG/L	U	V		
		CHLOROETHANE	0 4	UG/L	U	V		
		CHLOROFORM	0 2	UG/L	U	V		
		CHLOROMETHANE	0 4	UG/L	U	V		
		DIBROMOCHLOROMETHANE	0 2	UG/L	U	V		
		DIBROMOMETHANE	0 3	UG/L	U	V		
		DICHLORODIFLUOROMETHANE	0 2	UG/L	U	V		
		ETHYLBENZENE	0 2	UG/L	U	V		
		HEXACHLOROBUTADIENE	0 2	UG/L	U	V		
		ISOPROPYLBENZENE	0 2	UG/L	U	V		
		METHYLENE CHLORIDE	0 2	UG/L	U	V	5	0
		NAPHTHALENE	0 2	UG/L	U	V		
		PROPANE 1 2-DIBROMO-3-CHLORO	0 4	UG/L	U	R		
		STYRENE	0 2	UG/L	U	V		
		TETRACHLOROETHENE	0 2	UG/L	U	V	5	0
		TOLUENE	0 2	UG/L	U	V	2000	0
		TRICHLOROETHENE	0 2	UG/L	U	V	5	0
		TRICHLOROFLUOROMETHANE	0 3	UG/L	U	V		
		VINYL CHLORIDE	0 2	UG/L	U	V		
		cis-1 2 DICHLOROETHENE	0 2	UG/L	U	V		
		cis-1 3 DICHLOROPROPENE	0 2	UG/L	U	V		
		m p XYLENE	0 3	UG/L	U	V		
		n-BUTYLBENZENE	0 2	UG/L	U	V		
		n-PROPYLBENZENE	0 2	UG/L	U	V		
		o-CHLOROTOLUENE	0 3	UG/L	U	V		
		o-XYLENE	0 2	UG/L	U	V		
		p-CHLOROTOLUENE	0 2	UG/L	U	V		
		sec-BUTYLBENZENE	0 2	UG/L	U	V		
		tert BUTYLBENZENE	0 2	UG/L	U	V		
		trans-1 2-DICHLOROETHENE	0 2	UG/L	U	V		
		trans-1 3 DICHLOROPROPENE	0 4	UG/L	U	V		

Well 10492 RADS January 1994 March 1994

Sample Number	Sam Date	Chemical	Result	Unit Meas	Error	Qualif	VQual	ARAR	#Sam > ARAR
GW00373GA	10 Mar 94	GROSS ALPHA	23	PCI/L	3		Y	15	1
		GROSS BETA	13	PCI/L	4		Y	50	0
		TRITIUM	300	PCI/L	190	BJ	Y	20000	0
		URANIUM 233 234	18	PCI/L	3 3		Y		
		URANIUM 235	0 52	PCI/L	0 29	J	Y		
		URANIUM-238	13	PCI/L	2 4		Y		
		TOTAL URANIUM	31 52		5 99			40	0

Well 10692 RADS January 1994 March 1994

Sample Number	Sam Date	Chemical	Result	Unit Meas	Error	Qualif	VQual	ARAR	#Sam > ARAR
GW00375GA	10 Mar 94	AMERICIUM 241	0 004	PCI/L	0 006	U	Y	4	0
		GROSS ALPHA	18	PCI/L	3		Y	15	1
		GROSS BETA	9 2	PCI/L	4 3		Y	50	0
		PLUTONIUM 239/240	0.006	PCI/L	0 012	U	Y	15	0
		STRONTIUM 89 90	0 99	PCI/L	0 45	J	Y	8	0
		TOTAL RADIOCESIUM	0 25	PCI/L	0 75	U	Y		
		TRITIUM	560	PCI/L	210	B	Y		
		URANIUM-233 234	13	PCI/L	2 7		Y	20000	0
		URANIUM-235	0 62	PCI/L	0 33		Y		
		URANIUM 238	9 8	PCI/L	2		Y		
		TOTAL URANIUM	23 42		5 03			40	0

Well 31491 RADS January 1994 March 1994

Sample Number	Sam Date	Chemical	Result	Unit Meas	Error	Qualif	VQual	ARAR	#Sam > ARAR
GW00370GA	9-Mar 94	TRITIUM	360	PCI/L	200	BJ	Y	20000	0

Well 35691 RADS January 1994 March 1994

Sample Number	Sam Date	Chemical	Result	Unit Meas	Error	Qualif	VQual	ARAR	#Sam > ARAR
GW00333GA	8 Mar 94	AMERICIUM 241	0 004	PCI/L	0 008	U	Y	4	0
		GROSS ALPHA	25	PCI/L	3 3		Y	15	1
		GROSS BETA	17	PCI/L	1 6		Y	50	0
		PLUTONIUM 239/240	0 004	PCI/L	0 008	U	Y	15	0
		STRONTIUM 89 90	0 75	PCI/L	0 39	BJ	Y	8	0
		TOTAL RADIOCESIUM	0 18	PCI/L	0 94	U	Y		
		TRITIUM	300	PCI/L	230	U	Y	20000	0
		URANIUM 233 234	16	PCI/L	3 1		Y		
		URANIUM-235	0 51	PCI/L	0 28	J	Y		
		URANIUM 238	12	PCI/L	2 3		Y		
		TOTAL URANIUM	28 51		5 68			40	0

Well 45391 RADS January 1994 March 1994

Sample Number	Sam Date	Chemical	Result	Unit Meas	Error	Qualif	VQual	ARAR	# Sam > ARAR
GW00456GA	24-Mar 94	TRITIUM	13	PCI/L	230	U	Y	20000	0

W ll 10492 Water Q ality January 1994 March 1994

Sample Number	Sam Date	Chemical	Result	Unit Meas	Qualif	VQual	ARAR	# Sam > ARAR
GW00142GA	26-Jan 94	TOTAL ORGANIC HALOGENS	0 05	MG/L	U	R		
GW00230GA	17 Feb-94	TOTAL ORGANIC HALOGENS	0 06	MG/L		JA		
GW00373GA	10-Mar 94	BICARBONATE AS CACO3	26	MG/L		V		
		CARBONATE	1	MG/L	U	V		
		CHLORIDE	140	MG/L		V	250	0
		FLUORIDE	1 1	MG/L		V		
		NITRATE/NITRITE	6 3	MG/L		V	10	0
		ORTHOPHOSPHATE	0 02	MG/L		V		
		SULFATE	300	MG/L		V	250	1
		TOTAL DISSOLVED SOLIDS	1100	MG/L		V	400	1
		TOTAL ORGANIC HALOGENS	0 05	MG/L	U	R		
		TOTAL SUSPENDED SOLIDS	290	MG/L		V		

Well 10592 Water Quality January 1994 March 1994

Sample Number	Sam Date	Chemical	Result	Unit Meas	Qualif	VQual	ARAR	# Sam > ARAR
GW00143GA	26-Jan 94	TOTAL ORGANIC HALOGENS	0 05	MG/L	U	R		
GW00231GA	17 Feb-94	TOTAL ORGANIC HALOGENS	0 08	MG/L		JA		
GW00374GA	3-Mar 94	NITRATE/NITRITE	6 6	MG/L		Y	10	0
GW00403GA	10-Mar 94	TOTAL ORGANIC HALOGENS	0 05	MG/L	U	R		

Well 45391 Water Quality January 1994 March 1994

Sample Number	Sam Date	Chemical	Unit Meas	Qualif	Detect	Sam < ARAR
GW00099GA	20-Jan-94	TOTAL ORGANIC HALOGENS (	MG/L		0 05 2	
GW00448GA	21-Mar 94	TOTAL ORGANIC HALOGENS (	MG/L	U	0 05 1	
GW00456GA	24-Mar 94	NITRATE/NITRITE	MG/L		0 02	TRUE

Well 10692 Water Quality January 1994 March 1994

Sample Number	Sam Date	Chemical	Result	Unit Meas	Qualif	VQual	ARAR	# Sam > ARAR
GW00144GA	26-Jan 94	TOTAL ORGANIC HALOGENS	0 05	MG/L	U	R		
GW00232GA	17 Feb 94	TOTAL ORGANIC HALOGENS	0 05	MG/L	U	JA		
GW00375GA	10-Mar 94	BICARBONATE AS CACO3	520	MG/L		V		
		CARBONATE	1	MG/L	U	V		
		CHLORIDE	130	MG/L		V	250	0
		CYANIDE	0 01	MG/L	U	V		
		FLUORIDE	1 9	MG/L		V		
		NITRATE/NITRITE	0 3	MG/L		V	10	0
		ORTHOPHOSPHATE	0 08	MG/L		V		
		SULFATE	330	MG/L		V	250	1
		TOTAL DISSOLVED SOLIDS	1200	MG/L		V	400	1
		TOTAL ORGANIC HALOGENS	0 05	MG/L	U	R		
		TOTAL SUSPENDED SOLIDS	47	MG/L		V		

Well 10792 Water Quality January 1994 March 1994

Sample Number	Sam Date	Chemical	Result	Unit Meas	Qualif	VQual	ARAR	# Sam > ARAR
GW00145GA	26-Jan 94	TOTAL ORGANIC HALOGENS	0 05	MG/L	U	R		
GW00233GA	17 Feb-94	TOTAL ORGANIC HALOGENS	0 05	MG/L	U	R		
GW00376GA	10-Mar 94	NITRATE/NITRITE	6 1	MG/L		V	10	0
		TOTAL ORGANIC HALOGENS	0 05	MG/L	U	R		

Well 10992 Wat r Qual ty January 1994 March 1994

Sample Number	Sam Date	Chemical	Result	Unit Meas	Qualif	VQual	ARAR	# Sam > ARAR
GW00146GA	26 Jan 94	TOTAL ORGANIC HALOGENS	0 05	MG/L	U	R		
GW00234GA	17 Feb-94	TOTAL ORGANIC HALOGENS	0 05	MG/L	U	R		

Well 11092 Water Quality January 1994 March 1994

Sample Number	Sam Date	Chemical	Result	Unit Meas	Qualif	VQual	ARAR	# Sam > ARAR
GW00098GA	20-Jan 94	TOTAL ORGANIC HALOGENS	0 05	MG/L	U	R		
GW00235GA	17 Feb-94	TOTAL ORGANIC HALOGENS	0 05	MG/L	U	R		
GW00443GA	16-Mar 94	TOTAL ORGANIC HALOGENS	0 05	MG/L	U	Y		

Well 31491 Water Quality January 1994 March 1994

Sample Number	Sam Date	Chemical	Result	Unit Meas	Qualif	VQual	ARAR	# Sam > ARAR
GW00370GA	9-Mar 94	NITRATE/NITRITE	1 973	MG/L		Y	10	0
		ORTHOPHOSPHATE	0 0038	MG/L	U	Y		

Well 35691 Water Quality January 1994 March 1994

Sample Number	Sam Date	Chemical	Result	Unit Meas	Qualif	VQual	ARAR	# Sam > ARAR
GW00333GA	8-Mar 94	BICARBONATE AS CACO3	466 94	MG/L		Y		
		CARBONATE	4 29	MG/L	J	Y		
		CHLORIDE	151 1	MG/L		Y	250	0
		CYANIDE	0 0041	MG/L	U	Y		
		FLUORIDE	1 22	MG/L		Y		
		NITRATE/NITRITE	0 117	MG/L		Y	10	0
		ORTHOPHOSPHATE	0 02	MG/L	J	Y		
		SULFATE	461 7	MG/L		Y	250	1
		TOTAL DISSOLVED SOLIDS	1504	MG/L		Y	400	1
		TOTAL SUSPENDED SOLIDS	16	MG/L		Y		

W ll 10692 M tals J uary 1994 March 1994

S mpl N mber	S m Dat	Ch mical	R lt	U it Mea	Qualif	Val	ARAR	# Sam ARAR
GW00375GA	10-Mar 94	ALUMINUM	16	UG/L	U	JA	5000	0
		ANTIMONY	18	UG/L	U	V	60	0
		ARSENIC	1	UG/L	U	V	50	0
		BARIUM	61 8	UG/L	B	V	1000	0
		BERYLLIUM	1	UG/L	U	V	100	0
		CADMIUM	4	UG/L	U	V	10	0
		CALCIUM	163000	UG/L		V		
		CESIUM	63	UG/L	U	V		
		CHROMIUM	3	UG/L	U	V	50	0
		COBALT	4	UG/L	U	V		
		COPPER	2	UG/L	U	V	200	0
		IRON	8	UG/L	U	V	300	0
		LEAD	1	UG/L	U	V	50	0
		LITHIUM	24 6	UG/L	B	V	2500	0
		MAGNESIUM	47800	UG/L		V		
		MANGANESE	44 5	UG/L		V	50	0
		MERCURY	0 25	UG/L		V	2	0
		MOLYBDENUM	6	UG/L	U	V	100	0
		NICKEL	8	UG/L	U	V	200	0
		POTASSIUM	683	UG/L	B	JA		
		SELENIUM	1	UG/L	U	V	10	0
		SILICON	7080	UG/L		V		
		SILVER	2	UG/L	U	JA	50	0
		SODIUM	201000	UG/L		V		
		STRONTIUM	1380	UG/L		V		
		THALLIUM	1	UG/L	U	V	10	0
		TIN	25	UG/L	U	V		
		VANADIUM	3 8	UG/L	B	V	100	0
		ZINC	10	UG/L	U	JA	2000	0

Well 35691 M t l J ary 1994 March 1994

S mple N mber	S m D t	Chemical	Result	Unit Meas	Qualif	Val	ARAR	# Sam ARAR
GW00333GA	8-Ma 94	ALUMINUM	27	UG/L	U	Y	5000	0
		ANTIMONY	49	UG/L	U	Y	60	0
		ARSENIC	3	UG/L	UW	Y	50	0
		BARIUM	54 3	UG/L	J	Y	1000	0
		BERYLLIUM	1	UG/L	U	Y	100	0
		CADMIUM	2 4	UG/L	J	Y	10	0
		CALCIUM	263000	UG/L	E	Y		
		CESIUM	40	UG/L	JN	Y		
		CHROMIUM	4	UG/L	U	Y	50	0
		COBALT	6	UG/L	U	Y		
		COPPER	4	UG/L	U	Y	200	0
		IRON	9	UG/L	U	Y	300	0
		LEAD	1	UG/L	UW	Y	50	0
		LITHIUM	28 9	UG/L	J	Y	2500	0
		MAGNESIUM	62500	UG/L		Y		
		MANGANESE	2	UG/L	U	Y	50	0
		MERCURY	0 2	UG/L	U	Y	2	0
		MOLYBDENUM	13	UG/L	U	Y	100	0
		NICKEL	11	UG/L	U	Y	200	0
		POTASSIUM	1250	UG/L	J	Y		
		SELENIUM	10 8	UG/L		Y	10	1
		SILICON	9110	UG/L		Y		
		SILVER	4	UG/L	U	Y	50	0
		SODIUM	164000	UG/L		Y		
		STRONTIUM	1830	UG/L	N	Y		
		THALLIUM	3	UG/L	U	Y	10	0
		TIN	27	UG/L	U	Y		
		VANADIUM	6	UG/L	U	Y	100	0
		ZINC	3	UG/L	U	Y	2000	0

881 Fren h D · S mp VOA J ary 1994 M rch 1994

Sampl N mb	S m Dat	Chemical	Res It	Unit Meas	Qualif	VQual	ARAR	# Sam > ARAR
FT10164RG	19 Jan 94	1 1 1 TRICHLOROETHANE	5	UG/L	U	V	200	0
		1 1 2 2 TETRACHLOROETHANE	5	UG/L	U	V		
		1 1 2 TRICHLOROETHANE	5	UG/L	U	V	5	0
		1 1 DICHLOROETHANE	5	UG/L	U	V	7	0
		1 1 DICHLOROETHENE	5	UG/'	U	V	5	0
		1 2 4-TRICHLOROBENZENE	10	UG/L	U	V		
		1 2-DICHLOROBENZENE	10	UG/L	U	V		
		1 2 DICHLOROETHANE	5	UG/L	U	V	5	0
		1 2 DICHLOROETHENE	5	UG/L	U	V		
		1 2 DICHLOROPROPANE	5	UG/L	U	V		
		1 3 DICHLOROBENZENE	10	UG/L	U	V		
		1 4-DICHLOROBENZENE	10	UG/L	U	V		
		2 4 5-TRICHLOROPHENOL	50	UG/L	U	V		
		2 4 6-TRICHLOROPHENOL	10	UG/L	U	V		
		2 4-DICHLOROPHENOL	10	UG/L	U	V		
		2 4-DIMETHYLPHENOL	10	UG/L	U	V		
		2 4-DINITROPHENOL	50	UG/L	U	V		
		2 4-DINITROTOLUENE	10	UG/L	U	V		
		2 6-DINITROTOLUENE	10	UG/L	U	V		
		2 BUTANONE	10	UG/L	U	V		
		2-CHLORONAPHTHALENE	10	UG/L	U	V		
		2 CHLOROPHENOL	10	UG/L	U	V		
		2-HEXANONE	10	UG/L	U	V		
		2 METHYLNAPHTHALENE	10	UG/L	U	V		
		2 METHYLPHENOL	10	UG/L	U	V		
		2 NITROANILINE	50	UG/L	U	V		
		2 NITROPHENOL	10	UG/L	U	V		
		3 3 DICHLOROBENZIDINE	20	UG/L	U	V		
		3 NITROANILINE	50	UG/L	U	V		
		4 6-DINITRO-2 METHYLPHENOL	50	UG/L	U	V		
		4-CHLORO-3-METHYLPHENOL	10	UG/L	U	V		
		4-CHLOROANILINE	10	UG/L	U	V		
		4-CHLOROPHENYL PHENYL ETHER	10	UG/L	U	V		
		4-METHYL 2 PENTANONE	10	UG/L	U	V		
		4-METHYLPHENOL	10	UG/L	U	V		
		4-NITROANILINE	50	UG/L	U	V		
		4-NITROPHENOL	50	UG/L	U	V		
		ACENAPHTHENE	10	UG/L	U	V		
		ACENAPHTHYLENE	10	UG/L	U	V		
		ACETONE	10	UG/L	U	V	50	0
		ANTHRACENE	10	UG/L	U	V		
		BENZENE	5	UG/L	U	V		
		BENZO(a)ANTHRACENE	10	UG/L	U	V		
		BENZO(a)PYRENE	10	UG/L	U	V		
		BENZO(b)FLUORANTHENE	10	UG/L	U	V		
		BENZO(ghi)PERYLENE	10	UG/L	U	V		
		BENZO(k)FLUORANTHENE	10	UG/L	U	V		
		BENZOIC ACID	50	UG/L	U	V		
		BENZYL ALCOHOL	10	UG/L	U	V		
		BIS(2 CHLOROETHOXY)METHANE	10	UG/L	U	V		
		BIS(2 CHLOROETHYL)ETHER	10	UG/L	U	V		
		BIS(2-CHLOROISOPROPYL)ETHER	10	UG/L	U	V		
		BIS(2 ETHYLHEXYL)PHTHALATE	10	UG/L	U	V		
		BROMODICHLOROMETHANE	5	UG/L	U	V		
		BROMOFORM	5	UG/L	U	V		
		BROMOMETHANE	10	UG/L	U	V		
		BUTYL BENZYL PHTHALATE	10	UG/L	U	V		
		CARBON DISULFIDE	5	UG/L	U	V	5	0
		CARBON TETRACHLORIDE	5	UG/L	U	V	5	0

881 F e h Dral S mp VOA J n ary 1994 Ma ch 1994

Sampl Numb	Sam D t	Chemical	Res lt	U it Meas	Qual'f	VQual	ARAR	# S m > ARAR
FT10164RG	19-Jan 94	CHLOROBENZENE	5	UG/L	U	V		
		CHLOROETHANE	10	UG/L	U	V		
		CHLOROFORM	5	UG/L	U	V		
		CHLOROMETHANE	10	UG/L	U	V		
		CHRYSENE	10	UG/L	U	V		
		DI n BUTYL PHTHALATE	10	UG/L	U	V		
		DI-n-OCTYL PHTHALATE	10	UG/L	U	V		
		DIBENZO(a h)ANTHRACENE	10	UG/L	U	V		
		DIBENZOFURAN	10	UG/L	U	V		
		DIBROMOCHLOROMETHANE	5	UG/L	U	V		
		DIETHYL PHTHALATE	3	UG/L	J	A		
		DIMETHYL PHTHALATE	10	UG/L	U	V		
		ETHYLBENZENE	5	UG/L	U	V		
		FLUORANTHENE	10	UG/L	U	V		
		FLUORENE	10	UG/L	U	V		
		HEXACHLOROBENZENE	10	UG/L	U	V		
		HEXACHLOROBUTADIENE	10	UG/L	U	V		
		HEXACHLOROCYCLOPENTADIENE	10	UG/L	U	R		
		HEXACHLOROETHANE	10	UG/L	U	V		
		INDENO(1,2 3-cd)PYRENE	10	UG/L	U	V		
		ISOPHORONE	10	UG/L	U	V		
		METHYLENE CHLORIDE	5	UG/L	U	V	5	0
		N NITROSO-DI-n-PROPYLAMINE	10	UG/L	U	V		
		N NITROSODIPHENYLAMINE	10	UG/L	U	V		
		NAPHTHALENE	10	UG/L	U	V		
		NITROBENZENE	10	UG/L	U	V		
		PENTACHLOROPHENOL	50	UG/L	U	V		
		PHENANTHRENE	10	UG/L	U	V		
		PHENOL	10	UG/L	U	V		
		PYRENE	10	UG/L	U	V		
		STYRENE	5	UG/L	U	V		
		TETRACHLOROETHENE	5	UG/L	U	V	5	0
		TOLUENE	5	UG/L	U	V	2000	0
		TOTAL XYLENES	5	UG/L	U	V		
		TRICHLOROETHENE	5	UG/L	U	V	5	0
		VINYL ACETATE	10	UG/L	U	V		
		VINYL CHLORIDE	10	UG/L	U	V		
		cis 1 3-DICHLOROPROPENE	5	UG/L	U	V		
		p-BROMODIPHENYL ETHER	10	UG/L	U	V		
		trans-1 3-DICHLOROPROPENE	5	UG/L	U	V		

881 F h D a' S mp VOA Ja ry 1994 March 1994

Sampl N mbe	S m Date	Chemical	R s lt	U lt Meas	Q alif	VQual	ARAR	# Sam > ARAR
FT10172RG	16-Feb-94	1 1 1 TRICHLOROETHANE	5	UG/L	U	V	200	0
		1 1 2 2 TETRACHLOROETHANE	5	UG/L	U	V		
		1 1 2 TRICHLOROETHANE	5	UG/L	U	V	5	0
		1 1 DICHLOROETHANE	5	UG/L	U	V	7	0
		1 1 DICHLOROETHENE	5	UG/L	U	V	5	0
		1 2 4-TRICHLOROBENZENE	10	UG/L	U	V		
		1 2 DICHLOROBENZENE	10	UG/L	U	V		
		1 2 DICHLOROETHANE	5	UG/L	U	V	5	0
		1 2 DICHLOROETHENE	5	UG/L	U	V		
		1 2 DICHLOROPROPANE	5	UG/L	U	V		
		1 3-DICHLOROBENZENE	10	UG/L	U	V		
		1 4-DICHLOROBENZENE	10	UG/L	U	V		
		2 4 5-TRICHLOROPHENOL	50	UG/L	U	V		
		2 4 6 TRICHLOROPHENOL	10	UG/L	U	V		
		2 4-DICHLOROPHENOL	10	UG/L	U	V		
		2 4-DIMETHYLPHENOL	10	UG/L	U	V		
		2 4-DINITROPHENOL	50	UG/L	U	V		
		2 4-DINITROTOLUENE	10	UG/L	U	V		
		2 6-DINITROTOLUENE	10	UG/L	U	V		
		2 BUTANONE	10	UG/L	U	R		
		2-CHLORONAPHTHALENE	10	UG/L	U	V		
		2-CHLOROPHENOL	10	UG/L	U	V		
		2 HEXANONE	10	UG/L	U	R		
		2 METHYLNAPHTHALENE	10	UG/L	U	V		
		2 METHYLPHENOL	10	UG/L	U	V		
		2 NITROANILINE	50	UG/L	U	V		
		2 NITROPHENOL	10	UG/L	U	V		
		3 3 DICHLOROBENZIDINE	20	UG/L	U	V		
		3-NITROANILINE	50	UG/L	U	V		
		4 6 DINITRO 2 METHYLPHENOL	50	UG/L	U	V		
		4-CHLORO-3-METHYLPHENOL	10	UG/L	U	V		
		4-CHLOROANILINE	10	UG/L	U	V		
		4-CHLOROPHENYL PHENYL ETHER	10	UG/L	U	V		
		4-METHYL 2 PENTANONE	10	UG/L	U	V		
		4-METHYLPHENOL	10	UG/L	U	V		
		4-NITROANILINE	50	UG/L	U	V		
		4-NITROPHENOL	50	UG/L	U	V		
		ACENAPHTHENE	10	UG/L	U	V		
		ACENAPHTHYLENE	10	UG/L	U	V		
		ACETONE	10	UG/L	U	R	50	0
		ANTHRACENE	10	UG/L	U	V		
		BENZENE	5	UG/L	U	V		
		BENZO(a)ANTHRACENE	10	UG/L	U	V		
		BENZO(a)PYRENE	10	UG/L	U	V		
		BENZO(b)FLUORANTHENE	10	UG/L	U	V		
		BENZO(ghi)PERYLENE	10	UG/L	U	V		
		BENZO(k)FLUORANTHENE	10	UG/L	U	V		
		BENZOIC ACID	50	UG/L	U	V		
		BENZYL ALCOHOL	10	UG/L	U	V		
		BIS(2-CHLOROETHOXY)METHANE	10	UG/L	U	V		
		BIS(2-CHLOROETHYL)ETHER	10	UG/L	U	V		
		BIS(2-CHLOROISOPROPYL)ETHER	10	UG/L	U	V		
		BIS(2 ETHYLHEXYL)PHTHALATE	10	UG/L	U	V		
		BROMODICHLOROMETHANE	5	UG/L	U	V		
		BROMOFORM	5	UG/L	U	V		
		BROMOMETHANE	10	UG/L	U	V		
		BUTYL BENZYL PHTHALATE	10	UG/L	U	V		
		CARBON DISULFIDE	5	UG/L	U	V	5	0
		CARBON TETRACHLORIDE	5	UG/L	U	V	5	0
		CHLOROBENZENE	5	UG/L	U	V		
		CHLOROETHANE	10	UG/L	U	V		

881 F h Dra' S mp VOA J ary 1994 M h 1994

S mple N mb	Sam D t	Ch mi l	R s lt	Unit Meas	Qualif	VQual	ARAR	# Sam > ARAR
FT10172RG	16 Feb-94	CHLOROFORM	5	UG/L	U	V		
		CHLOROMETHANE	10	UG/L	U	V		
		CHRYSENE	10	UG/L	U	V		
		DI n-BUTYL PHTHALATE	10	UG/L	U	J		
		DI-n-OCTYL PHTHALATE	10	UG/L	U	V		
		DIBENZO(a h)ANTHRACENE	10	UG/L	U	V		
		DIBENZOFURAN	10	UG/L	U	V		
		DIBROMOCHLOROMETHANE	5	UG/L	U	V		
		DIETHYL PHTHALATE	10	UG/L	U	V		
		DIMETHYL PHTHALATE	10	UG/L	U	V		
		ETHYLBENZENE	5	UG/L	U	V		
		FLUORANTHENE	10	UG/L	U	V		
		FLUORENE	10	UG/L	U	V		
		HEXACHLOROBENZENE	10	UG/L	U	V		
		HEXACHLOROBUTADIENE	10	UG/L	U	V		
		HEXACHLOROCYCLOPENTADIENE	10	UG/L	U	V		
		HEXACHLOROETHANE	10	UG/L	U	V		
		INDENO(1,2 3-cd)PYRENE	10	UG/L	U	V		
		ISOPHORONE	10	UG/L	U	V		
		METHYLENE CHLORIDE	5	UG/L	U	V	5	0
		N-NITROSO DI-n-PROPYLAMINE	10	UG/L	U	V		
		N NITROSODIPHENYLAMINE	10	UG/L	U	V		
		NAPHTHALENE	10	UG/L	U	V		
		NITROBENZENE	10	UG/L	U	V		
		PENTACHLOROPHENOL	50	UG/L	U	V		
		PHENANTHRENE	10	UG/L	U	V		
		PHENOL	10	UG/L	U	V		
		PYRENE	10	UG/L	U	V		
		STYRENE	5	UG/L	U	V		
		TETRACHLOROETHENE	5	UG/L	U	V	5	0
		TOLUENE	5	UG/L	U	V	2000	0
		TOTAL XYLENES	5	UG/L	U	V		
		TRICHLOROETHENE	5	UG/L	U	V	5	0
		VINYL ACETATE	10	UG/L	U	V		
		VINYL CHLORIDE	10	UG/L	U	V		
		cis-1 3-DICHLOROPROPENE	5	UG/L	U	V		
		p-BROMODIPHENYL ETHER	10	UG/L	U	V		
		trans 1 3-DICHLOROPROPENE	5	UG/L	U	V		

881 F n h D ai S mp VOA Ja uary 1994 March 1994

Sample Numbe	Sam D te	Chemi al	R	It	U it Mea	Qualif	VQual	ARAR	# Sam > ARAR
FT10192RG	1 Mar 94	1 1 1 TRICHLOROETHANE		5	UG/L	U	V	200	0
		1 1 2 2 TETRACHLOROETHANE		5	UG/L	U	V		
		1 1 2 TRICHLOROETHANE		5	UG/L	U	V	5	0
		1 1 DICHLOROETHANE		5	UG/L	U	V	7	0
		1 1 DICHLOROETHENE		5	UG/L	U	V	5	0
		1 2 4-TRICHLOROBENZENE		10	UG/L	U	V		
		1 2 DICHLOROBENZENE		10	UG/L	U	V		
		1 2 DICHLOROETHANE		5	UG/L	U	V	5	0
		1 2 DICHLOROETHENE		5	UG/L	U	V		
		1 2 DICHLOROPROPANE		5	UG/L	U	V		
		1 3-DICHLOROBENZENE		10	UG/L	U	V		
		1 4-DICHLOROBENZENE		10	UG/L	U	V		
		2 4 5-TRICHLOROPHENOL		50	UG/L	U	V		
		2 4 6-TRICHLOROPHENOL		10	UG/L	U	V		
		2 4-DICHLOROPHENOL		10	UG/L	U	V		
		2 4-DIMETHYLPHENOL		10	UG/L	U	V		
		2 4-DINITROPHENOL		50	UG/L	U	V		
		2 4-DINITROTOLUENE		10	UG/L	U	V		
		2 6-DINITROTOLUENE		10	UG/L	U	V		
		2 BUTANONE		10	UG/L	U	V		
		2-CHLORONAPHTHALENE		10	UG/L	U	V		
		2-CHLOROPHENOL		10	UG/L	U	V		
		2-CYCLOHEXEN-1-O1		8 3	UG/L	BJ	Z		
		2 HEXANONE		10	UG/L	U	V		
		2 METHYLNAPHTHALENE		10	UG/L	U	V		
		2 METHYLPHENOL		10	UG/L	U	V		
		2 NITROANILINE		50	UG/L	U	V		
		2 NITROPHENOL		10	UG/L	U	V		
		3 3 DICHLOROBENZIDINE		20	UG/L	U	V		
		3 NITROANILINE		50	UG/L	U	V		
		4 6-DINITRO-2 METHYLPHENOL		50	UG/L	U	V		
		4-CHLORO-3-METHYLPHENOL		10	UG/L	U	V		
		4-CHLOROANILINE		10	UG/L	U	V		
		4-CHLOROPHENYL PHENYL ETHER		10	UG/L	U	V		
		4-METHYL 2 PENTANONE		10	UG/L	U	V		
		4-METHYLPHENOL		10	UG/L	U	V		
		4-NITROANILINE		50	UG/L	U	V		
		4-NITROPHENOL		50	UG/L	U	V		
		ACENAPHTHENE		10	UG/L	U	V		
		ACENAPHTHYLENE		10	UG/L	U	V		
		ACETONE		10	UG/L	U	V	50	0
		ANTHRACENE		10	UG/L	U	V		
		BENZENE		5	UG/L	U	V		
		BENZO(a)ANTHRACENE		10	UG/L	U	V		
		BENZO(a)PYRENE		10	UG/L	U	V		
		BENZO(b)FLUORANTHENE		10	UG/L	U	V		
		BENZO(ghi)PERYLENE		10	UG/L	U	V		
		BENZO(k)FLUORANTHENE		10	UG/L	U	V		
		BENZOIC ACID		50	UG/L	U	V		
		BENZYL ALCOHOL		10	UG/L	U	V		
		BIS(2-CHLOROETHOXY)METHANE		10	UG/L	U	V		
		BIS(2-CHLOROETHYL)ETHER		10	UG/L	U	V		
		BIS(2-CHLOROISOPROPYL)ETHER		10	UG/L	U	V		
		BIS(2 ETHYLHEXYL)PHTHALATE		10	UG/L	U	V		
		BROMODICHLOROMETHANE		5	UG/L	U	V		
		BROMOFORM		5	UG/L	U	V		
		BROMOMETHANE		10	UG/L	U	V		
		BUTYL BENZYL PHTHALATE		10	UG/L	U	V		
		CARBON DISULFIDE		5	UG/L	U	V	5	0
		CARBON TETRACHLORIDE		5	UG/L	U	V	5	0
		CHLOROBENZENE		5	UG/L	U	V		

S mpl Numb	S m D t	Chemical	R	lt	U it M	Q alif	VQ l	ARAR	# S m > ARAR
FT10192RG	1 Mar 94	CHLOROETHANE		10	UG/L	U	V		
		CHLOROFORM		5	UG/L	U	V		
		CHLOROMETHANE		10	UG/L	U	V		
		CHRYSENE		10	UG/L	U	V		
		DI-n BUTYL PHTHALATE		10	UG/L	U	J		
		DI-n-OCTYL PHTHALATE		10	UG/L	U	V		
		DIBENZO(a h)ANTHRACENE		10	UG/L	U	V		
		DIBENZOFURAN		10	UG/L	U	V		
		DIBROMOCHLOROMETHANE		5	UG/L	U	V		
		DIETHYL PHTHALATE		10	UG/L	U	V		
		DIMETHYL PHTHALATE		10	UG/L	U	V		
		ETHYLBENZENE		5	UG/L	U	V		
		FLUORANTHENE		10	UG/L	U	V		
		FLUORENE		10	UG/L	U	V		
		HEXACHLOROBENZENE		10	UG/L	U	V		
		HEXACHLOROBUTADIENE		10	UG/L	U	V		
		HEXACHLOROCYCLOPENTADIENE		10	UG/L	U	V		
		HEXACHLOROETHANE		10	UG/L	U	V		
		INDENO(1 2 3-cd)PYRENE		10	UG/L	U	V		
		ISOPHORONE		10	UG/L	U	V		
		METHYLENE CHLORIDE		5	UG/L	U	V	5	0
		N-NITROSO-DI-n-PROPYLAMINE		10	UG/L	U	V		
		N-NITROSODIPHENYLAMINE		10	UG/L	U	V		
		NAPHTHALENE		10	UG/L	U	V		
		NITROBENZENE		10	UG/L	U	V		
		PENTACHLOROPHENOL		50	UG/L	U	V		
		PHENANTHRENE		10	UG/L	U	V		
		PHENOL		10	UG/L	U	V		
		PYRENE		10	UG/L	U	V		
		STYRENE		5	UG/L	U	V		
		TETRACHLOROETHENE		5	UG/L	U	V	5	0
		TOLUENE		5	UG/L	U	V	2000	0
		TOTAL XYLENES		5	UG/L	U	V		
		TRICHLOROETHENE		5	UG/L	U	V	5	0
		VINYL ACETATE		10	UG/L	U	V		
		VINYL CHLORIDE		10	UG/L	U	V		
		cis 1 3-DICHLOROPROPENE		5	UG/L	U	V		
		p-BROMODIPHENYL ETHER		10	UG/L	U	V		
		trans 1 3-DICHLOROPROPENE		5	UG/L	U	V		

881 French Drain Sump Rads January 1994 March 1994

Sample Number	Sam Date	Chemical	Result	Unit Meas	Error	Qualif	VQual	ARAR	# Sam > ARAR
FT10164RG	19-Jan 94	AMERICIUM 241	0 02	PCI/L	0 012		V	4	0
		GROSS ALPHA	3 1	PCI/L	1 5		A	15	0
		GROSS BETA	0 98	PCI/L	1 2	U	V	50	0
		PLUTONIUM 239/240	0	PCI/L	0 003	U	V	15	0
		STRONTIUM-89 90	0 047	PCI/L	0 097	U	V	8	0
		TOTAL RADIOCESIUM	-0 11	PCI/L	0 1	U	V		
		TRITIUM	220	PCI/L	140	J	A	20000	0
		URANIUM 233 234	4 3	PCI/L	0 79		V		
		URANIUM-235	0 057	PCI/L	0 058	U	V		
		URANIUM 238	3 2	PCI/L	0 66		A		
		TOTAL URANIUM	7 557		1 508			40	0
FT10172RG	16-Feb-94	AMERICIUM 241	0 003	PCI/L	0 006	U	V	4	0
		GROSS ALPHA	2 9	PCI/L	1 3		V	15	0
		GROSS BETA	5	PCI/L	1 1		V	50	0
		PLUTONIUM 239/240	0 001	PCI/L	0 002	U	V	15	0
		STRONTIUM 89 90	0 059	PCI/L	0 2	U	Y	8	0
		TOTAL RADIOCESIUM	0 75	PCI/L	0 14	J	Y		
		TRITIUM	130	PCI/L	130	U	A	20000	0
		URANIUM 233 234	3 9	PCI/L	0 76		V		
		URANIUM-235	0 096	PCI/L	0 13	U	V		
		URANIUM-238	3	PCI/L	0 67		V		
		TOTAL URANIUM	6 996		1 56			40	0
FT10192RG	1 Mar 94	AMERICIUM 241	0 001	PCI/L	0 002	U	Y	4	0
		GROSS ALPHA	3 1	PCI/L	1 1		Y	15	0
		GROSS BETA	4 3	PCI/L	1		Y	50	0
		PLUTONIUM 239/240	-0 001	PCI/L	0 002	U	Y	15	0
		STRONTIUM-89 90	0 11	PCI/L	0 22	U	Y	8	0
		TOTAL RADIOCESIUM	-0 011	PCI/L	0 092	U	Y		
		TRITIUM	18	PCI/L	160	U	Y	20000	0
		URANIUM-233 234	4	PCI/L	0 81		Y		
		URANIUM-235	0 14	PCI/L	0 14	U	Y		
		URANIUM 238	2 4	PCI/L	0 57		Y		
		TOTAL URANIUM	6 54		1 52			40	0

881 French Drain Sump Water Quality January 1994 March 1994

Sample Number	Sam Date	Chemical	Result	Unit Meas	Qualif	VQual	ARAR	# Sam > ARAR
FT10164RG	19-Jan 94	4 4 DDD	0 1	UG/L	U	V		
		4 4 DDE	0 1	UG/L	U	V		
		4 4 DDT	0 1	UG/L	U	V		
		ALDRIN	0 05	UG/L	U	V		
		AROCLOR 1016	0 5	UG/L	U	V		
		AROCLOR 1221	0 5	UG/L	U	V		
		AROCLOR 1232	0 5	UG/L	U	V		
		AROCLOR 1242	0 5	UG/L	U	V		
		AROCLOR 1248	0 5	UG/L	U	V		
		AROCLOR 1254	1	UG/L	U	V		
		AROCLOR 1260	1	UG/L	U	V		
		BICARBONATE AS CACO3	230	MG/L		V		
		CARBONATE	1	MG/L	U	V		
		CHLORIDE	110	MG/L		V	250	0
		DIELDRIN	0 1	UG/L	U	V		
		ENDOSULFAN I	0 05	UG/L	U	V		
		ENDOSULFAN II	0 1	UG/L	U	V		
		ENDOSULFAN SULFATE	0 1	UG/L	U	V		
		ENDRIN	0 1	UG/L	U	V		
		ENDRIN ALDEHYDE		UG/L		Z		
		ENDRIN KETONE	0 1	UG/L	U	V		
		FLUORIDE	1 1	MG/L		V		
		HEPTACHLOR	0 05	UG/L	U	V		
		HEPTACHLOR EPOXIDE	0 05	UG/L	U	V		
		METHOXYCHLOR	0 5	UG/L	U	V		
		NITRATE/NITRITE	6 3	MG/L		V	10	0
		SULFATE	68	MG/L		JA	250	0
		TOTAL DISSOLVED SOLIDS	500	MG/L		V	400	1
		TOTAL SUSPENDED SOLIDS	4	MG/L	U	V		
		TOXAPHENE	1	UG/L	U	V		
		alpha-BHC	0 05	UG/L	U	V		
		alpha-CHLORDANE	0 5	UG/L	U	V		
		beta-BHC	0 05	UG/L	U	V		
		delta BHC	0 05	UG/L	U	V		
		gamma-BHC (LINDANE)	0 05	UG/L	U	V		
		gamma-CHLORDANE	0 5	UG/L	U	V		

881 French Drain Sump Water Quality January 1994 March 1994

Sample Number	Sam Date	Chemical	Result	Unit Meas	Qualif	VQual	ARAR	# Sam > ARAR
FT10172RG	16-Feb 94	4 4 DDD	0 1	UG/L	U	V		
		4 4 DDE	0 1	UG/L	U	V		
		4 4 DDT	0 1	UG/L	U	V		
		ALDRIN	0 05	UG/L	U	V		
		AROCLOR 1016	0 5	UG/L	U	V		
		AROCLOR 1221	0 5	UG/L	U	V		
		AROCLOR 1232	0 5	UG/L	U	V		
		AROCLOR 1242	0 5	UG/L	U	V		
		AROCLOR 1248	0 5	UG/L	U	V		
		AROCLOR 1254	1	UG/L	U	V		
		AROCLOR 1260	1	UG/L	U	V		
		BICARBONATE AS CACO3	220	MG/L		V		
		CARBONATE	1	MG/L	U	V		
		CHLORIDE	110	MG/L		V	250	0
		DIELDRIN	0 1	UG/L	U	V		
		ENDOSULFAN I	0 05	UG/L	U	V		
		ENDOSULFAN II	0 1	UG/L	U	V		
		ENDOSULFAN SULFATE	0 1	UG/L	U	V		
		ENDRIN	0 1	UG/L	U	V		
		ENDRIN ALDEHYDE		UG/L		Z		
		ENDRIN KETONE	0 1	UG/L	U	V		
		FLUORIDE	1	MG/L		V		
		HEPTACHLOR	0 05	UG/L	U	V		
		HEPTACHLOR EPOXIDE	0 05	UG/L	U	V		
		METHOXYCHLOR	0 5	UG/L	U	V		
		NITRATE/NITRITE	5 3	MG/L		V	10	0
		SULFATE	46	MG/L		JA	250	0
		TOTAL DISSOLVED SOLIDS	490	MG/L		V	400	1
		TOTAL SUSPENDED SOLIDS	4	MG/L	U	V		
		TOXAPHENE	1	UG/L	U	V		
		alpha-BHC	0 05	UG/L	U	V		
		alpha-CHLORDANE	0 5	UG/L	U	V		
		beta-BHC	0 05	UG/L	U	V		
		delta-BHC	0 05	UG/L	U	V		
		gamma-BHC (LINDANE)	0 05	UG/L	U	V		
		gamma-CHLORDANE	0 5	UG/L	U	V		

881 French Drain Sump Water Quality January 1994 March 1994

Sample Number	Sam Date	Chemical	Result	Unit Meas	Qualif	VQual	ARAR	# Sam > ARAR
FT10192RG	1 Mar 94	4 4 DDD	0 1	UG/L	U	V		
		4 4 DDE	0 1	UG/L	U	V		
		4 4 DDT	0 1	UG/L	U	V		
		ALDRIN	0 05	UG/L	U	V		
		AROCLOR 1016	0 5	UG/L	U	V		
		AROCLOR 1221	0 5	UG/L	U	V		
		AROCLOR 1232	0 5	UG/L	U	V		
		AROCLOR 1242	0 5	UG/L	U	V		
		AROCLOR 1248	0 5	UG/L	U	V		
		AROCLOR 1254	1	UG/L	U	V		
		AROCLOR 1260	1	UG/L	U	V		
		BICARBONATE AS CACO3	230	MG/L		V		
		CARBONATE	1	MG/L	U	V		
		CHLORIDE	120	MG/L		V	250	0
		DIELDRIN	0 1	UG/L	U	V		
		ENDOSULFAN I	0 05	UG/L	U	V		
		ENDOSULFAN II	0 1	UG/L	U	V		
		ENDOSULFAN SULFATE	0 1	UG/L	U	V		
		ENDRIN	0 1	UG/L	U	V		
		ENDRIN ALDEHYDE				Z		
		ENDRIN KETONE	0 1	UG/L	U	V		
		FLUORIDE	1	MG/L		V		
		HEPTACHLOR	0 05	UG/L	U	V		
		HEPTACHLOR EPOXIDE	0 05	UG/L	U	V		
		METHOXYCHLOR	0 5	UG/L	U	V		
		NITRATE/NITRITE	5 7	MG/L		V	10	0
		SULFATE	48	MG/L		JA	250	0
		TOTAL DISSOLVED SOLIDS	520	MG/L		V	400	1
		TOTAL SUSPENDED SOLIDS	4	MG/L	U	V		
		TOXAPHENE	1	UG/L	U	V		
		alpha-BHC	0 05	UG/L	U	V		
		alpha-CHLORDANE	0 5	UG/L	U	V		
		beta-BHC	0 05	UG/L	U	V		
		delta-BHC	0 05	UG/L	U	V		
		gamma BHC (LINDANE)	0 05	UG/L	U	V		
		gamma-CHLORDANE	0 5	UG/L	U	V		

881 F ch Dra' S mp M tal Jan ry 1994 Mar h 1994

Sampl N mb	Sam Dat	Chemical	Res lt	Unit Meas	Q alif	Val	ARAR	# Sam > ARAR
FT10164RG	19-Jan-94	ALUMINUM	24 4	UG/L	B	V	5000	0
		ANTIMONY	18	UG/L	U	V	60	0
		ARSENIC	3 7	UG/L	B	JA	50	0
		BARIUM	153	UG/L	B	V	1000	0
		BERYLLIUM	1	UG/L	U	V	100	0
		CADMIUM	4	UG/L	U	V	10	0
		CALCIUM	97800	UG/L		V		
		CESIUM	85	UG/L	U	V		
		CHROMIUM	3	UG/L	U	V	50	0
		COBALT	4	UG/L	U	V		
		COPPER	4 2	UG/L	B	V	200	0
		IRON	22 7	UG/L	B	V	300	0
		LEAD	2 2	UG/L	B	V	50	0
		LITHIUM	18 5	UG/L	B	V	2500	0
		MAGNESIUM	22500	UG/L		V		
		MANGANESE	1	UG/L	U	V	50	0
		MERCURY	0 2	UG/L	U	V	2	0
		MOLYBDENUM	7 8	UG/L	U	JA	100	0
		NICKEL	8	UG/L	U	V	200	0
		POTASSIUM	2710	UG/L	B	V		
		SELENIUM	7 4	UG/L		V	10	0
		SILICON	6850	UG/L		V		
		SILVER	2	UG/L	U	V	50	0
		SODIUM	52600	UG/L		V		
		STRONTIUM	713	UG/L		V		
		THALLIUM	2	UG/L	U	V	10	0
		TIN	25	UG/L	U	V		
		VANADIUM	3	UG/L	U	V	100	0
		ZINC	370	UG/L		V	2000	0
FT10172RG	16 Feb-94	ALUMINUM	18 6	UG/L	B	V	5000	0
		ANTIMONY	18	UG/L	U	V	60	0
		ARSENIC	2 4	UG/L	B	V	50	0
		BARIUM	153	UG/L	B	V	1000	0
		BERYLLIUM	1	UG/L	U	V	100	0
		CADMIUM	4	UG/L	U	V	10	0
		CALCIUM	91800	UG/L		V		
		CESIUM	85	UG/L	U	V		
		CHROMIUM	6 8	UG/L	B	V	50	0
		COBALT	4	UG/L	U	V		
		COPPER	9 2	UG/L	B	V	200	0
		IRON	41 4	UG/L	B	V	300	0
		LEAD	2 4	UG/L	B	V	50	0
		LITHIUM	15 2	UG/L	B	V	2500	0
		MAGNESIUM	21000	UG/L		V		
		MANGANESE	1	UG/L	U	V	50	0
		MERCURY	0 2	UG/L	U	V	2	0
		MOLYBDENUM	6	UG/L	U	V	100	0
		NICKEL	8	UG/L	U	V	200	0
		POTASSIUM	3030	UG/L	B	V		
		SELENIUM	4 6	UG/L	BSN	JA	10	0
		SILICON	6410	UG/L		V		
		SILVER	2	UG/L	U	V	50	0
		SODIUM	49800	UG/L		V		
		STRONTIUM	668	UG/L		V		
		THALLIUM	1	UG/L	U	JA	10	0
		TIN	25	UG/L	U	V		
		VANADIUM	3	UG/L	U	V	100	0
		ZINC	287	UG/L		V	2000	0

881 Fre h Drai Sump Metals Ja ary 1994 March 1994

Sample N mbe	Sam Date	Chemical	Result	Unit Meas	Qualif	Val	ARAR	# Sam > ARAR
FT10192RG	1 Mar 94	ALUMINUM	15 6	UG/L	B	V	5000	0
		ANTIMONY	18	UG/L	U	V	60	0
		ARSENIC	2	UG/L	U	V	50	0
		BARIUM	164	UG/L	BE	JA	1000	0
		BERYLLIUM	1	UG/L	U	V	100	0
		CADMIUM	4	UG/L	U	V	10	0
		CALCIUM	101000	UG/L		V		
		CESIUM	63	UG/L	U	V		
		CHROMIUM	4 8	UG/L	B	V	50	0
		COBALT	4	UG/L	U	V		
		COPPER	7 5	UG/L	B	V	200	0
		IRON	41 2	UG/L	U	JA	300	0
		LEAD	2	UG/L	UW	V	50	0
		LITHIUM	15 4	UG/L	B	V	2500	0
		MAGNESIUM	22800	UG/L	E	JA		
		MANGANESE	1	UG/L	UE	V	50	0
		MERCURY	0 2	UG/L	U	V	2	0
		MOLYBDENUM	6	UG/L	U	V	100	0
		NICKEL	8	UG/L	U	V	200	0
		POTASSIUM	2760	UG/L	B	V		
		SELENIUM	4 9	UG/L	U	JA	10	0
		SILICON	6750	UG/L		V		
		SILVER	2	UG/L	U	V	50	0
		SODIUM	51900	UG/L		V		
		STRONTIUM	698	UG/L	E	JA		
		THALLIUM	2	UG/L	U	V	10	0
		TIN	25	UG/L	U	V		
		VANADIUM	3 4	UG/L	B	V	100	0
		ZINC	131	UG/L	E	JA	2000	0

881 F ting Drain VOA J ry 1994 March 1994

S mple Number	S m Dat	Chemical	R	It	Unit Meas	Qualif	VQual	ARAR	# S m > ARAR
FT10161RG	19 Ja 94	1 1 1 TRICHLOROETHANE		5	UG/L	U	V	200	0
		1 1 2 2 TETRACHLOROETHANE		5	UG/L	U	V		
		1 1 2 TRICHLOROETHANE		5	UG/L	U	V	5	0
		1 1 DICHLOROETHANE		5	UG/L	U	V	7	0
		1 1 DICHLOROETHENE		5	UG/L	U	V	5	0
		1 2 4-TRICHLOROBENZENE		10	UG/L	U	V		
		1 2 DICHLOROBENZENE		10	UG/L	U	V		
		1 2 DICHLOROETHANE		5	UG/L	U	V	5	0
		1 2 DICHLOROETHENE		5	UG/L	U	V		
		1 2 DICHLOROPROPANE		5	UG/L	U	V		
		1 3-DICHLOROBENZENE		10	UG/L	U	V		
		1 4-DICHLOROBENZENE		10	UG/L	U	V		
		2 4 5-TRICHLOROPHENOL		50	UG/L	U	V		
		2 4 6-TRICHLOROPHENOL		10	UG/L	U	V		
		2 4-DICHLOROPHENOL		10	UG/L	U	V		
		2 4-DIMETHYLPHENOL		10	UG/L	U	V		
		2 4-DINITROPHENOL		50	UG/L	U	V		
		2 4-DINITROTOLUENE		10	UG/L	U	V		
		2 6-DINITROTOLUENE		10	UG/L	U	V		
		2 BUTANONE		10	UG/L	U	V		
		2 CHLORONAPHTHALENE		10	UG/L	U	V		
		2 CHLOROPHENOL		10	UG/L	U	V		
		2-HEXANONE		10	UG/L	U	V		
		2-METHYLNAPHTHALENE		10	UG/L	U	V		
		2-METHYLPHENOL		10	UG/L	U	V		
		2 NITROANILINE		50	UG/L	U	V		
		2 NITROPHENOL		10	UG/L	U	V		
		3 3 DICHLOROBENZIDINE		20	UG/L	U	V		
		3 NITROANILINE		50	UG/L	U	V		
		4 6-DINITRO-2-METHYLPHENOL		50	UG/L	U	V		
		4-CHLORO 3-METHYLPHENOL		10	UG/L	U	V		
		4-CHLOROANILINE		10	UG/L	U	V		
		4-CHLOROPHENYL PHENYL ETHER		10	UG/L	U	V		
		4-METHYL 2-PENTANONE		10	UG/L	U	V		
		4-METHYLPHENOL		10	UG/L	U	V		
		4-NITROANILINE		50	UG/L	U	V		
		4-NITROPHENOL		50	UG/L	U	V		
		ACENAPHTHENE		10	UG/L	U	V		
		ACENAPHTHYLENE		10	UG/L	U	V		
		ACETONE		10	UG/L	U	V	50	0
		ANTHRACENE		10	UG/L	U	V		
		BENZENE		5	UG/L	U	V		
		BENZO(a)ANTHRACENE		10	UG/L	U	V		
		BENZO(a)PYRENE		10	UG/L	U	V		
		BENZO(b)FLUORANTHENE		10	UG/L	U	V		
		BENZO(ghi)PERYLENE		10	UG/L	U	V		
		BENZO(k)FLUORANTHENE		10	UG/L	U	V		
		BENZOIC ACID		50	UG/L	U	V		
		BENZYL ALCOHOL		10	UG/L	U	V		
		BIS(2-CHLOROETHOXY)METHANE		10	UG/L	U	V		
		BIS(2-CHLOROETHYL)ETHER		10	UG/L	U	V		
		BIS(2-CHLOROISOPROPYL)ETHER		10	UG/L	U	V		
		BIS(2-ETHYLHEXYL)PHTHALATE		10	UG/L	U	J		
		BROMODICHLOROMETHANE		5	UG/L	U	V		
		BROMOFORM		5	UG/L	U	V		
		BROMOMETHANE		10	UG/L	U	V		
		BUTYL BENZYL PHTHALATE		10	UG/L	U	V		
		CARBON DISULFIDE		5	UG/L	U	V	5	0
		CARBON TETRACHLORIDE		5	UG/L	U	V	5	0
		CHLOROBENZENE		5	UG/L	U	V		
		CHLOROETHANE		10	UG/L	U	V		
		CHLOROFORM		5	UG/L	U	V		
		CHLOROMETHANE		10	UG/L	U	V		
		CHRYSENE		10	UG/L	U	V		
		DI BUTYL PHTHALATE		10	UG/L	U	V		
		DI-n OCTYL PHTHALATE		10	UG/L	U	V		

Sampl N mber	S m D t	Chemical	Result	Unit Meas	Qualif	VQual	ARAR	# Sam > ARAR
FT10161RG	19-Jan 94	DIBENZO(a h)ANTHRACENE	10	UG/L	U	V		
		DIBENZOFURAN	10	UG/L	U	V		
		DIBROMOCHLOROMETHANE	5	UG/L	U	V		
		DIETHYL PHTHALATE	10	UG/L	U	V		
		DIMETHYL PHTHALATE	10	UG/L	U	V		
		ETHYLBENZENE	5	UG/L	U	V		
		FLUORANTHENE	10	UG/L	U	V		
		FLUORENE	10	UG/L	U	V		
		HEXACHLOROBENZENE	10	UG/L	U	V		
		HEXACHLOROBUTADIENE	10	UG/L	U	V		
		HEXACHLOROCYCLOPENTADIENE	10	UG/L	U	R		
		HEXACHLOROETHANE	10	UG/L	U	V		
		INDENO(1 2 3-cd)PYRENE	10	UG/L	U	V		
		ISOPHORONE	10	UG/L	U	V		
		METHYLENE CHLORIDE	5	UG/L	U	V	5	0
		N NITROSO-DI-n-PROPYLAMINE	10	UG/L	U	V		
		N NITROSODIPHENYLAMINE	10	UG/L	U	V		
		NAPHTHALENE	10	UG/L	U	V		
		NITROBENZENE	10	UG/L	U	V		
		PENTACHLOROPHENOL	50	UG/L	U	V		
		PHENANTHRENE	10	UG/L	U	V		
		PHENOL	10	UG/L	U	V		
		PYRENE	10	UG/L	U	V		
		STYRENE	5	UG/L	U	V		
		TETRACHLOROETHENE	2	UG/L	J	A	5	0
		TOLUENE	5	UG/L	U	V	2000	0
		TOTAL XYLENES	5	UG/L	U	V		
		TRICHLOROETHENE	5	UG/L	U	V	5	0
		VINYL ACETATE	10	UG/L	U	V		
		VINYL CHLORIDE	10	UG/L	U	V		
		cis-1 3-DICHLOROPROPENE	5	UG/L	U	V		
		p-BROMODIPHENYL ETHER	10	UG/L	U	V		
		trans-1 3 DICHLOROPROPENE	5	UG/L	U	V		
FT10170RG	16 Feb-94	1 1 1 TRICHLOROETHANE	5	UG/L	U	V	200	0
		1 1 2 2 TETRACHLOROETHANE	5	UG/L	U	V		
		1 1 2 TRICHLOROETHANE	5	UG/L	U	V	5	0
		1 1 DICHLOROETHANE	5	UG/L	U	V	7	0
		1 1 DICHLOROETHENE	5	UG/L	U	V	5	0
		1 2 4-TRICHLOROBENZENE	10	UG/L	U	V		
		1 2 DICHLOROBENZENE	10	UG/L	U	V		
		1 2 DICHLOROETHANE	5	UG/L	U	V	5	0
		1 2 DICHLOROETHENE	5	UG/L	U	V		
		1 2 DICHLOROPROPANE	5	UG/L	U	V		
		1 3-DICHLOROBENZENE	10	UG/L	U	V		
		1 4-DICHLOROBENZENE	10	UG/L	U	V		
		2 4 5-TRICHLOROPHENOL	50	UG/L	U	V		
		2 4 6 TRICHLOROPHENOL	10	UG/L	U	V		
		2 4-DICHLOROPHENOL	10	UG/L	U	V		
		2 4-DIMETHYLPHENOL	10	UG/L	U	V		
		2 4 DINITROPHENOL	50	UG/L	U	V		
		2 4-DINITROTOLUENE	10	UG/L	U	V		
		2 6-DINITROTOLUENE	10	UG/L	U	V		
		2 BUTANONE	10	UG/L	U	R		
		2 CHLORONAPHTHALENE	10	UG/L	U	V		
		2-CHLOROPHENOL	10	UG/L	U	V		
		2 HEXANONE	10	UG/L	U	R		
		2-METHYLNAPHTHALENE	10	UG/L	U	V		
		2-METHYLPHENOL	10	UG/L	U	V		
		2 NITROANILINE	50	UG/L	U	V		
		2 NITROPHENOL	10	UG/L	U	V		
		3 3 DICHLOROBENZIDINE	20	UG/L	U	V		
		3-NITROANILINE	50	UG/L	U	V		
		4 6 DINITRO-2-METHYLPHENOL	50	UG/L	U	V		
		4 CHLORO 3-METHYLPHENOL	10	UG/L	U	V		
		4 CHLOROANILINE	10	UG/L	U	V		
		4 CHLOROPHENYL PHENYL ETHER	10	UG/L	U	V		

881 F oting Dra VOA Jan ry 1994 March 1994

Sample N mber	S m D t	Chemical	R ult	U 't M as	Qualif	VQual	ARAR	# S m > ARAR
FT10170RG	16 Feb-94	4-METHYL 2 PENTANONE	10	UG/L	U	V		
		4-METHYLPHENOL	10	UG/L	U	V		
		4-NITROANILINE	50	UG/L	U	V		
		4 NITROPHENOL	50	UG/L	U	V		
		ACENAPHTHENE	10	UG/L	U	V		
		ACENAPHTHYLENE	10	UG/L	U	V		
		ACETONE	10	UG/L	U	R	50	0
		ANTHRACENE	10	UG/L	U	V		
		BENZENE	5	UG/L	U	V		
		BENZO(a)ANTHRACENE	10	UG/L	U	V		
		BENZO(a)PYRENE	10	UG/L	U	V		
		BENZO(b)FLUORANTHENE	10	UG/L	U	V		
		BENZO(ghi)PERYLENE	10	UG/L	U	V		
		BENZO(k)FLUORANTHENE	10	UG/L	U	V		
		BENZOIC ACID	50	UG/L	U	V		
		BENZYL ALCOHOL	10	UG/L	U	V		
		BIS(2-CHLOROETHOXY)METHANE	10	UG/L	U	V		
		BIS(2-CHLOROETHYL)ETHER	10	UG/L	U	V		
		BIS(2-CHLOROISOPROPYL)ETHER	10	UG/L	U	V		
		BIS(2 ETHYLHEXYL)PHTHALATE	3	UG/L	J	A		
		BROMODICHLOROMETHANE	5	UG/L	U	V		
		BROMOFORM	5	UG/L	U	V		
		BROMOMETHANE	10	UG/L	U	V		
		BUTYL BENZYL PHTHALATE	10	UG/L	U	V		
		CARBON DISULFIDE	5	UG/L	U	V	5	0
		CARBON TETRACHLORIDE	5	UG/L	U	V	5	0
		CHLOROBENZENE	5	UG/L	U	V		
		CHLOROETHANE	10	UG/L	U	V		
		CHLOROFORM	5	UG/L	U	V		
		CHLOROMETHANE	10	UG/L	U	V		
		CHRYSENE	10	UG/L	U	V		
		DI n BUTYL PHTHALATE	10	UG/L	U	J		
		DI OCTYL PHTHALATE	10	UG/L	U	V		
		DIBENZO(a h)ANTHRACENE	10	UG/L	U	V		
		DIBENZOFURAN	10	UG/L	U	V		
		DIBROMOCHLOROMETHANE	5	UG/L	U	V		
		DIETHYL PHTHALATE	10	UG/L	U	V		
		DIMETHYL PHTHALATE	10	UG/L	U	V		
		ETHYLBENZENE	5	UG/L	U	V		
		FLUORANTHENE	10	UG/L	U	V		
		FLUORENE	10	UG/L	U	V		
		HEXACHLOROBENZENE	10	UG/L	U	V		
		HEXACHLOROBUTADIENE	10	UG/L	U	V		
		HEXACHLOROCYCLOPENTADIENE	10	UG/L	U	V		
		HEXACHLOROETHANE	10	UG/L	U	V		
		Hexanedioic acid dioctyl es	9	UG/L	J	Z		
		INDENO(1 2 3-cd)PYRENE	10	UG/L	U	V		
		ISOPHORONE	10	UG/L	U	V		
		METHYLENE CHLORIDE	2	UG/L	J	A	5	0
		N NITROSO-DI-n-PROPYLAMINE	10	UG/L	U	V		
		N-NITROSODIPHENYLAMINE	10	UG/L	U	V		
		NAPHTHALENE	10	UG/L	U	V		
		NITROBENZENE	10	UG/L	U	V		
		PENTACHLOROPHENOL	50	UG/L	U	V		
		PHENANTHRENE	10	UG/L	U	V		
		PHENOL	10	UG/L	U	V		
		PYRENE	10	UG/L	U	V		
		STYRENE	5	UG/L	U	V		
		TETRACHLOROETHENE	1	UG/L	J	A	5	0
		TOLUENE	5	UG/L	U	V	2000	0
		TOTAL XYLENES	5	UG/L	U	V	5	0
		TRICHLOROETHENE	5	UG/L	U	V		
		VINYL ACETATE	10	UG/L	U	V		
		VINYL CHLORIDE	10	UG/L	U	V		
		cis-1 3 DICHLOROPROPENE	5	UG/L	U	V		
		p-BROMODIPHENYL ETHER	10	UG/L	U	V		
		tran 1 3 DICHLOROPROPENE	5	UG/L	U	V		

881 Footing Dra' VOA Jan ry 1994 M rch 1994

S mpl N mb	S m D t	Chemi al	R it	U it M	Qualif	VQual	ARAR	# Sam > ARAR
FT10190RG	1-Mar 94	1 1 1 TRICHLOROETHANE	5	UG/L	U	V	200	0
		1 1 1 TRICHLOROETHANE	5	UG/L	U	V	200	0
		1 1 2 2 TETRACHLOROETHANE	5	UG/L	U	V		
		1 1 2 2 TETRACHLOROETHANE	5	UG/L	U	V		
		1 1 2 TRICHLOROETHANE	5	UG/L	U	V	5	0
		1 1 2 TRICHLOROETHANE	5	UG/L	U	V	5	0
		1 1-DICHLOROETHANE	5	UG/L	U	V	7	0
		1 1-DICHLOROETHANE	5	UG/L	U	V	7	0
		1 1 DICHLOROETHENE	5	UG/L	U	V	5	0
		1 1 DICHLOROETHENE	5	UG/L	U	V	5	0
		1 2 4-TRICHLOROBENZENE	10	UG/L	U	V		
		1 2 DICHLOROBENZENE	10	UG/L	U	V		
		1 2 DICHLOROETHANE	5	UG/L	U	V	5	0
		1 2 DICHLOROETHANE	5	UG/L	U	V	5	0
		1 2 DICHLOROETHENE	5	UG/L	U	V		
		1 2 DICHLOROETHENE	5	UG/L	U	V		
		1 2 DICHLOROPROPANE	5	UG/L	U	V		
		1 2 DICHLOROPROPANE	5	UG/L	U	V		
		1 3-DICHLOROBENZENE	10	UG/L	U	V		
		1 4-DICHLOROBENZENE	10	UG/L	U	V		
		2 4 5-TRICHLOROPHENOL	50	UG/L	U	V		
		2 4 6-TRICHLOROPHENOL	10	UG/L	U	V		
		2 4-DICHLOROPHENOL	10	UG/L	U	V		
		2 4-DIMETHYLPHENOL	10	UG/L	U	V		
		2 4-DINITROPHENOL	50	UG/L	U	V		
		2 4-DINITROTOLUENE	10	UG/L	U	V		
		2 6-DINITROTOLUENE	10	UG/L	U	V		
		2 BUTANONE	10	UG/L	U	V		
		2 BUTANONE	10	UG/L	U	V		
		2 CHLORONAPHTHALENE	10	UG/L	U	V		
		2 CHLOROPHENOL	10	UG/L	U	V		
		2-CYCLOHEXEN 1-O1	10	UG/L	BJ	Z		
		2 CYCLOHEXEN 1-ONE	9 7	UG/L	BJ	Z		
		2 HEXANONE	10	UG/L	U	V		
		2 HEXANONE	10	UG/L	U	V		
		2-METHYLNAPHTHALENE	10	UG/L	U	V		
		2-METHYLPHENOL	10	UG/L	U	V		
		2 NITROANILINE	50	UG/L	U	V		
		2 NITROPHENOL	10	UG/L	U	V		
		3 3 DICHLOROBENZIDINE	20	UG/L	U	V		
		3-NITROANILINE	50	UG/L	U	V		
		4 6-DINITRO-2-METHYLPHENOL	50	UG/L	U	V		
		4-CHLORO-3-METHYLPHENOL	10	UG/L	U	V		
		4-CHLOROANILINE	10	UG/L	U	V		
		4-CHLOROPHENYL PHENYL ETHER	10	UG/L	U	V		
		4-METHYL 2 PENTANONE	10	UG/L	U	V		
		4-METHYL 2 PENTANONE	10	UG/L	U	V		
		4-METHYLPHENOL	10	UG/L	U	V		
		4-NITROANILINE	50	UG/L	U	V		
		4-NITROPHENOL	50	UG/L	U	V		
		ACENAPHTHENE	10	UG/L	U	V		
		ACENAPHTHYLENE	10	UG/L	U	V		
		ACETONE	10	UG/L	U	V	50	0
		ACETONE	10	UG/L	U	V	50	0
		ANTHRACENE	10	UG/L	U	V		
		BENZENE	5	UG/L	U	V		

881 Fo ti g D i VOA J ry 1994 March 1994

S mpl N mb	S m D t	Chemical	R sult	Unit Meas	Qualif	VQual	ARAR	# S m > ARAR
FT10190RG	1 Mar 94	BENZENE	5	UG/L	U	V		
		BENZO(a)ANTHRACENE	10	UG/L	U	V		
		BENZO(a)PYRENE	10	UG/L	U	V		
		BENZO(b)FLUORANTHENE	10	UG/L	U	V		
		BENZO(ghi)PERYLENE	10	UG/L	U	V		
		BENZO(k)FLUORANTHENE	10	UG/L	U	V		
		BENZOIC ACID	50	UG/L	U	V		
		BENZYL ALCOHOL	10	UG/L	U	V		
		BIS(2-CHLOROETHOXY)METHANE	10	UG/L	U	V		
		BIS(2-CHLOROETHYL)ETHER	10	UG/L	U	V		
		BIS(2 CHLOROISOPROPYL)ETHER	10	UG/L	U	V		
		BIS(2 ETHYLHEXYL)PHTHALATE	10	UG/L	U	V		
		BROMODICHLOROMETHANE	5	UG/L	U	V		
		BROMODICHLOROMETHANE	5	UG/L	U	V		
		BROMOFORM	5	UG/L	U	V		
		BROMOFORM	5	UG/L	U	V		
		BROMOMETHANE	10	UG/L	U	V		
		BROMOMETHANE	10	UG/L	U	V		
		BUTYL BENZYL PHTHALATE	10	UG/L	U	V		
		CARBON DISULFIDE	5	UG/L	U	V	5	0
		CARBON DISULFIDE	5	UG/L	U	V	5	0
		CARBON TETRACHLORIDE	5	UG/L	U	V	5	0
		CARBON TETRACHLORIDE	5	UG/L	U	V	5	0
		CHLOROBENZENE	5	UG/L	U	V		
		CHLOROBENZENE	5	UG/L	U	V		
		CHLOROETHANE	10	UG/L	U	V		
		CHLOROETHANE	10	UG/L	U	V		
		CHLOROFORM	5	UG/L	U	V		
		CHLOROFORM	5	UG/L	U	V		
		CHLOROMETHANE	10	UG/L	U	V		
		CHLOROMETHANE	10	UG/L	U	V		
		CHRYSENE	10	UG/L	U	V		
		DI BUTYL PHTHALATE	10	UG/L	U	J		
		DI n-OCTYL PHTHALATE	10	UG/L	U	V		
		DIBENZO(a h)ANTHRACENE	10	UG/L	U	V		
		DIBENZOFURAN	10	UG/L	U	V		
		DIBROMOCHLOROMETHANE	5	UG/L	U	V		
		DIBROMOCHLOROMETHANE	5	UG/L	U	V		
		DIETHYL PHTHALATE	10	UG/L	U	V		
		DIMETHYL PHTHALATE	10	UG/L	U	V		
		ETHYLBENZENE	5	UG/L	U	V		
		ETHYLBENZENE	5	UG/L	U	V		
		FLUORANTHENE	10	UG/L	U	V		
		FLUORENE	10	UG/L	U	V		
		HEXACHLOROBENZENE	10	UG/L	U	V		
		HEXACHLOROBUTADIENE	10	UG/L	U	V		
		HEXACHLOROCYCLOPENTADIENE	10	UG/L	U	V		
		HEXACHLOROETHANE	10	UG/L	U	V		
		INDENO(1 2 3-cd)PYRENE	10	UG/L	U	V		
		ISOPHORONE	10	UG/L	U	V		
		METHYLENE CHLORIDE	5	UG/L	U	V	5	0
		METHYLENE CHLORIDE	5	UG/L	U	V	5	0
		N-NITROSO-DI-n-PROPYLAMINE	10	UG/L	U	V		
		N NITROSODIPHENYLAMINE	10	UG/L	U	V		
		NAPHTHALENE	10	UG/L	U	V		
		NITROBENZENE	10	UG/L	U	V		
		PENTACHLOROPHENOL	50	UG/L	U	V		
		PHENANTHRENE	10	UG/L	U	V		
		PHENOL	10	UG/L	U	V		
		PYRENE	10	UG/L	U	V		
		STYRENE	5	UG/L	U	V		
		STYRENE	5	UG/L	U	V		
		TETRACHLOROETHENE	1	UG/L	J	A	5	0
		TETRACHLOROETHENE	1	UG/L	J	A	5	0
		TOLUENE	5	UG/L	U	V	2000	0
		TOLUENE	5	UG/L	U	V	2000	0
		TOTAL XYLENES	5	UG/L	U	V		

881 Footi g Dra VOA J ry 1994 March 1994

Sampl N mber	S m D t	Chemical	Res lt	Unit M	Qualif	VQual	ARAR	# S m > ARAR
FT10190RG	1-Mar 94	TOTAL XYLENES	5	UG/L	U	V		
		TRICHLOROETHENE	5	UG/L	U	V	5	0
		TRICHLOROETHENE	5	UG/L	U	V	5	0
		VINYL ACETATE	10	UG/L	U	V		
		VINYL ACETATE	10	UG/L	U	V		
		VINYL CHLORIDE	10	UG/L	U	V		
		VINYL CHLORIDE	10	UG/L	U	V		
		cis-1 3-DICHLOROPROPENE	5	UG/L	U	V		
		cis-1 3-DICHLOROPROPENE	5	UG/L	U	V		
		p-BROMODIPHENYL ETHER	10	UG/L	U	V		
		trans-1 3-DICHLOROPROPENE	5	UG/L	U	V		
		trans-1 3-DICHLOROPROPENE	5	UG/L	U	V		

881 Footing Drain Water Quality January 1994 March 1994

Sample Number	Sam Date	Chemical	Result	Unit Meas	Qualif	VQual	ARAR	# Sam > ARAR
FT10161RG	19 Jan 94	4 4 DDD	0 1	UG/L	U	V		
		4 4 DDE	0 1	UG/L	U	V		
		4 4 DDT	0 1	UG/L	U	V		
		ALDRIN	0 05	UG/L	U	V		
		AROCLOR 1016	0 5	UG/L	U	V		
		AROCLOR 1221	0 5	UG/L	U	V		
		AROCLOR 1232	0 5	UG/L	U	V		
		AROCLOR 1242	0 5	UG/L	U	V		
		AROCLOR 1248	0 5	UG/L	U	V		
		AROCLOR 1254	1	UG/L	U	V		
		AROCLOR 1260	1	UG/L	U	V		
		BICARBONATE AS CACO3	210	MG/L		V		
		CARBONATE	1	MG/L	U	V		
		CHLORIDE	110	MG/L		V	250	0
		DIELDRIN	0 1	UG/L	U	V		
		ENDOSULFAN I	0 05	UG/L	U	V		
		ENDOSULFAN II	0 1	UG/L	U	V		
		ENDOSULFAN SULFATE	0 1	UG/L	U	V		
		ENDRIN	0 1	UG/L	U	V		
		ENDRIN ALDEHYDE		UG/L		Z		
		ENDRIN KETONE	0 1	UG/L	U	V		
		FLUORIDE	1	MG/L		V		
		HEPTACHLOR	0 05	UG/L	U	V		
		HEPTACHLOR EPOXIDE	0 05	UG/L	U	V		
		METHOXYCHLOR	0 5	UG/L	U	V		
		NITRATE/NITRITE	6 9	MG/L		V	10	0
		SULFATE	49	MG/L		JA	250	0
		TOTAL DISSOLVED SOLIDS	470	MG/L		V	400	1
		TOTAL SUSPENDED SOLIDS	4	MG/L	U	V		
		TOXAPHENE	1	UG/L	U	V		
		alpha-BHC	0 05	UG/L	U	V		
		alpha-CHLORDANE	0 5	UG/L	U	V		
		beta-BHC	0 05	UG/L	U	V		
		delta-BHC	0 05	UG/L	U	V		
		gamma-BHC (LINDANE)	0 05	UG/L	U	V		
		gamma-CHLORDANE	0 5	UG/L	U	V		

881 Footing Drain Water Quality January 1994 March 1994

Sample Number	Sam Date	Chemical	Result	Unit Meas	Qualif	VQual	ARAR	# Sam > ARAR
FT10170RG	16 Feb-94	4 4 DDD	0 1	UG/L	U	V		
		4 4 DDE	0 1	UG/L	U	V		
		4 4 DDT	0 1	UG/L	U	V		
		ALDRIN	0 05	UG/L	U	V		
		AROCLOR 1016	0 5	UG/L	U	V		
		AROCLOR 1221	0 5	UG/L	U	V		
		AROCLOR 1232	0 5	UG/L	U	V		
		AROCLOR 1242	0 5	UG/L	U	V		
		AROCLOR 1248	0 5	UG/L	U	V		
		AROCLOR 1254	1	UG/L	U	V		
		AROCLOR 1260	1	UG/L	U	V		
		BICARBONATE AS CACO3	210	MG/L		V		
		CARBONATE	1	MG/L	U	V		
		CHLORIDE	120	MG/L		V	250	0
		DIELDRIN	0 1	UG/L	U	V		
		ENDOSULFAN I	0 05	UG/L	U	V		
		ENDOSULFAN II	0 1	UG/L	U	V		
		ENDOSULFAN SULFATE	0 1	UG/L	U	V		
		ENDRIN	0 1	UG/L	U	V		
		ENDRIN ALDEHYDE		UG/L		Z		
		ENDRIN KETONE	0 1	UG/L	U	V		
		FLUORIDE	1	MG/L		V		
		HEPTACHLOR	0 05	UG/L	U	V		
		HEPTACHLOR EPOXIDE	0 05	UG/L	U	V		
		METHOXYCHLOR	0 5	UG/L	U	V		
		NITRATE/NITRITE	5 9	MG/L		V	10	0
		SULFATE	42	MG/L		JA	250	0
		TOTAL DISSOLVED SOLIDS	500	MG/L		V	400	1
		TOTAL SUSPENDED SOLIDS	4	MG/L	U	V		
		TOXAPHENE	1	UG/L	U	V		
		alpha-BHC	0 05	UG/L	U	V		
		alpha-CHLORDANE	0 5	UG/L	U	V		
		beta-BHC	0 05	UG/L	U	V		
		delta BHC	0 05	UG/L	U	V		
		gamma-BHC (LINDANE)	0 05	UG/L	U	V		
		gamma-CHLORDANE	0 5	UG/L	U	V		

881 Footing Drain Water Quality January 1994 March 1994

Sample Number	Sam Date	Chemical	Result	Unit Meas	Qualif	VQual	ARAR	# Sam > ARAR
FT10190RG	1 Mar 94	4 4 DDD	0 1	UG/L	U	V		
		4 4 DDE	0 1	UG/L	U	V		
		4 4 DDT	0 1	UG/L	U	V		
		ALDRIN	0 05	UG/L	U	V		
		AROCLOR 1016	0 5	UG/L	U	V		
		AROCLOR 1221	0 5	UG/L	U	V		
		AROCLOR 1232	0 5	UG/L	U	V		
		AROCLOR 1242	0 5	UG/L	U	V		
		AROCLOR 1248	0 5	UG/L	U	V		
		AROCLOR 1254	1	UG/L	U	V		
		AROCLOR 1260	1	UG/L	U	V		
		BICARBONATE AS CACO3	220	MG/L		V		
		CARBONATE	1	MG/L	U	V		
		CHLORIDE	120	MG/L		V	250	0
		DIELDRIN	0 1	UG/L	U	V		
		ENDOSULFAN I	0 05	UG/L	U	V		
		ENDOSULFAN II	0 1	UG/L	U	V		
		ENDOSULFAN SULFATE	0 1	UG/L	U	V		
		ENDRIN	0 1	UG/L	U	V		
		ENDRIN ALDEHYDE				Z		
		ENDRIN KETONE	0 1	UG/L	U	V		
		FLUORIDE	0 9	MG/L		V		
		HEPTACHLOR	0 05	UG/L	U	V		
		HEPTACHLOR EPOXIDE	0 05	UG/L	U	V		
		METHOXYCHLOR	0 5	UG/L	U	V		
		NITRATE/NITRITE	5 7	MG/L		V	10	0
		SULFATE	39	MG/L		V	250	0
		TOTAL DISSOLVED SOLIDS	500	MG/L		V	400	1
		TOTAL SUSPENDED SOLIDS	4	MG/L	U	V		
		TOXAPHENE	1	UG/L	U	V		
		alpha-BHC	0 05	UG/L	U	V		
		alpha-CHLORDANE	0 5	UG/L	U	V		
		beta-BHC	0 05	UG/L	U	V		
		delta BHC	0 05	UG/L	U	V		
		gamma-BHC (LINDANE)	0 05	UG/L	U	V		
		gamma-CHLORDANE	0 5	UG/L	U	V		

881 Footing D ai M tal J nuary 1994 March 1994

Sample Numbe	Sam Date	Chemical	R sult	U it M	Q I'f	VQual	ARAR	# Sam > ARAR
FT10161RG	19 Jan-94	ALUMINUM	97 2	UG/L	B	V	5000	0
		ANTIMONY	18	UG/L	U	JA	60	0
		ARSENIC	1	UG/L	UW	R	50	0
		BARIUM	154	UG/L	B	V	1000	0
		BERYLLIUM	1	UG/L	U	V	100	0
		CADMIUM	4	UG/L	U	V	10	0
		CALCIUM	96300	UG/L		V		
		CESIUM	85	UG/L	U	V		
		CHROMIUM	3	UG/L	U	V	50	0
		COBALT	4	UG/L	U	V		
		COPPER	2	UG/L	U	V	200	0
		IRON	24 3	UG/L	B	V	300	0
		LEAD	1	UG/L	U	V	50	0
		LITHIUM	14 7	UG/L	B	V	2500	0
		MAGNESIUM	20900	UG/L		V		
		MANGANESE	1	UG/L	U	V	50	0
		MERCURY	0 2	UG/L	U	V	2	0
		MOLYBDENUM	14 4	UG/L	U	JA	100	0
		NICKEL	8	UG/L	U	V	200	0
		POTASSIUM	2700	UG/L	B	V		
		SELENIUM	1 3	UG/L	U	JA	10	0
		SILICON	6840	UG/L		V		
		SILVER	2	UG/L	U	V	50	0
		SODIUM	44100	UG/L		V		
		STRONTIUM	657	UG/L		V		
		THALLIUM	2	UG/L	U	V	10	0
		TIN	25	UG/L	U	V		
		VANADIUM	3	UG/L	U	V	100	0
		ZINC	31 3	UG/L		V	2000	0
FT10170RG	16-Feb-94	ALUMINUM	16	UG/L	B	V	5000	0
		ANTIMONY	18	UG/L	U	V	60	0
		ARSENIC	1	UG/L	U	V	50	0
		BARIUM	158	UG/L	B	V	1000	0
		BERYLLIUM	1	UG/L	U	V	100	0
		CADMIUM	4	UG/L	U	V	10	0
		CALCIUM	93600	UG/L		V		
		CESIUM	85	UG/L	U	V		
		CHROMIUM	6 8	UG/L	B	V	50	0
		COBALT	4	UG/L	U	V		
		COPPER	2	UG/L	U	V	200	0
		IRON	32 1	UG/L	B	V	300	0
		LEAD	1	UG/L	U	V	50	0
		LITHIUM	12 4	UG/L	B	V	2500	0
		MAGNESIUM	21300	UG/L		V		
		MANGANESE	1	UG/L	U	V	50	0
		MERCURY	0 2	UG/L	U	V	2	0
		MOLYBDENUM	6	UG/L	U	V	100	0
		NICKEL	8	UG/L	U	V	200	0
		POTASSIUM	2800	UG/L	B	V		
		SELENIUM	1	UG/L	UN	R	10	0
		SILICON	6340	UG/L		V		
		SILVER	2	UG/L	U	V	50	0
		SODIUM	46600	UG/L		V		
		STRONTIUM	663	UG/L		V		
		THALLIUM	1	UG/L	U	JA	10	0
		TIN	25	UG/L	U	V		
		VANADIUM	3	UG/L	U	V	100	0
		ZINC	29 8	UG/L		V	2000	0

881 F ti g Dra' M tals Jan ary 1994 March 1994

Sample N mbe	Sam Date	Chemical	Result	U it Me	Q alif	VQ al	ARAR	# Sam > ARAR
FT10190RG	1 Mar 94	ALUMINUM	13 3	UG/L	B	V	5000	0
		ANTIMONY	18	UG/L	U	V	60	0
		ARSENIC	2	UG/L	U	V	50	0
		BARIUM	158	UG/L	BE	JA	1000	0
		BERYLLIUM	1	UG/L	U	V	100	0
		CADMIUM	4	UG/L	U	V	10	0
		CALCIUM	97400	UG/L		V		
		CESIUM	63	UG/L	U	V		
		CHROMIUM	4 5	UG/L	B	V	50	0
		COBALT	4	UG/L	U	V		
		COPPER	2	UG/L	U	V	200	0
		IRON	26 2	UG/L	U	JA	300	0
		LEAD	2	UG/L	U	V	50	0
		LITHIUM	12 9	UG/L	B	V	2500	0
		MAGNESIUM	21500	UG/L	E	JA		
		MANGANESE	1	UG/L	UE	V	50	0
		MERCURY	0 35	UG/L		V	2	0
		MOLYBDENUM	6	UG/L	U	V	100	0
		NICKEL	8	UG/L	U	V	200	0
		POTASSIUM	3270	UG/L	B	V		
		SELENIUM	2 1	UG/L	U	JA	10	0
		SILICON	6370	UG/L		V		
		SILVER	2	UG/L	U	V	50	0
		SODIUM	47800	UG/L		V		
		STRONTIUM	659	UG/L	E	JA		
		THALLIUM	2	UG/L	U	V	10	0
		TIN	25	UG/L	U	V		
		VANADIUM	3 3	UG/L	B	V	100	0
		ZINC	30 3	UG/L	E	JA	2000	0

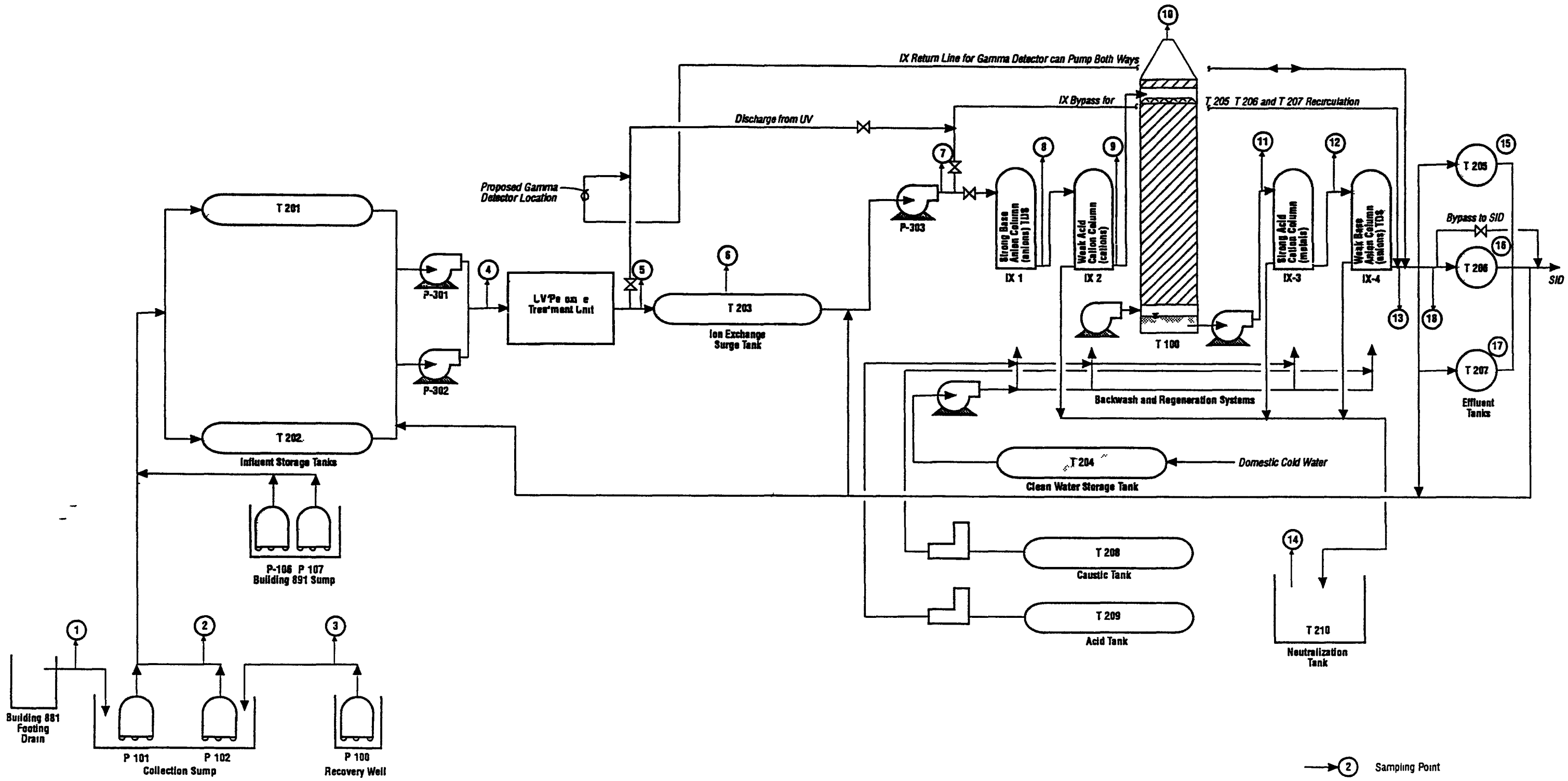
IX Return Line for Gamma Detector can Pump Both Ways
IX Bypass for
T 205 T 206 and T 207 Recirculation
Discharge from UV
Proposed Gamma Detector Location
T 201
P-301
P-302
LVPa on e Tree'ment Unit
T 203
Ion Exchange Surge Tank
P-303
Strong Base Anion Column (anions) TDS
IX 1
Weak Acid Cation Column (cations)
IX 2
T 100
Strong Acid Cation Column (metals)
IX-3
Weak Base Anion Column (anions) TDS
IX-4
T 205
Bypass to SID
T 206
SID
T 207
Effluent Tanks
Backwash and Regeneration Systems
T 204
Domestic Cold Water
Clean Water Storage Tank
T 202
Influent Storage Tanks
P-106 P 107
Building 891 Sump
T 208
Caustic Tank
T 209
Acid Tank
T 210
Neutralization Tank
Building 881 Footing Drain
P 101
P 102
Collection Sump
P 100
Recovery Well
Sampling Point

FIGURE 1 0 1

Rocky Flats OU1 April–June 1994 Water Level Map

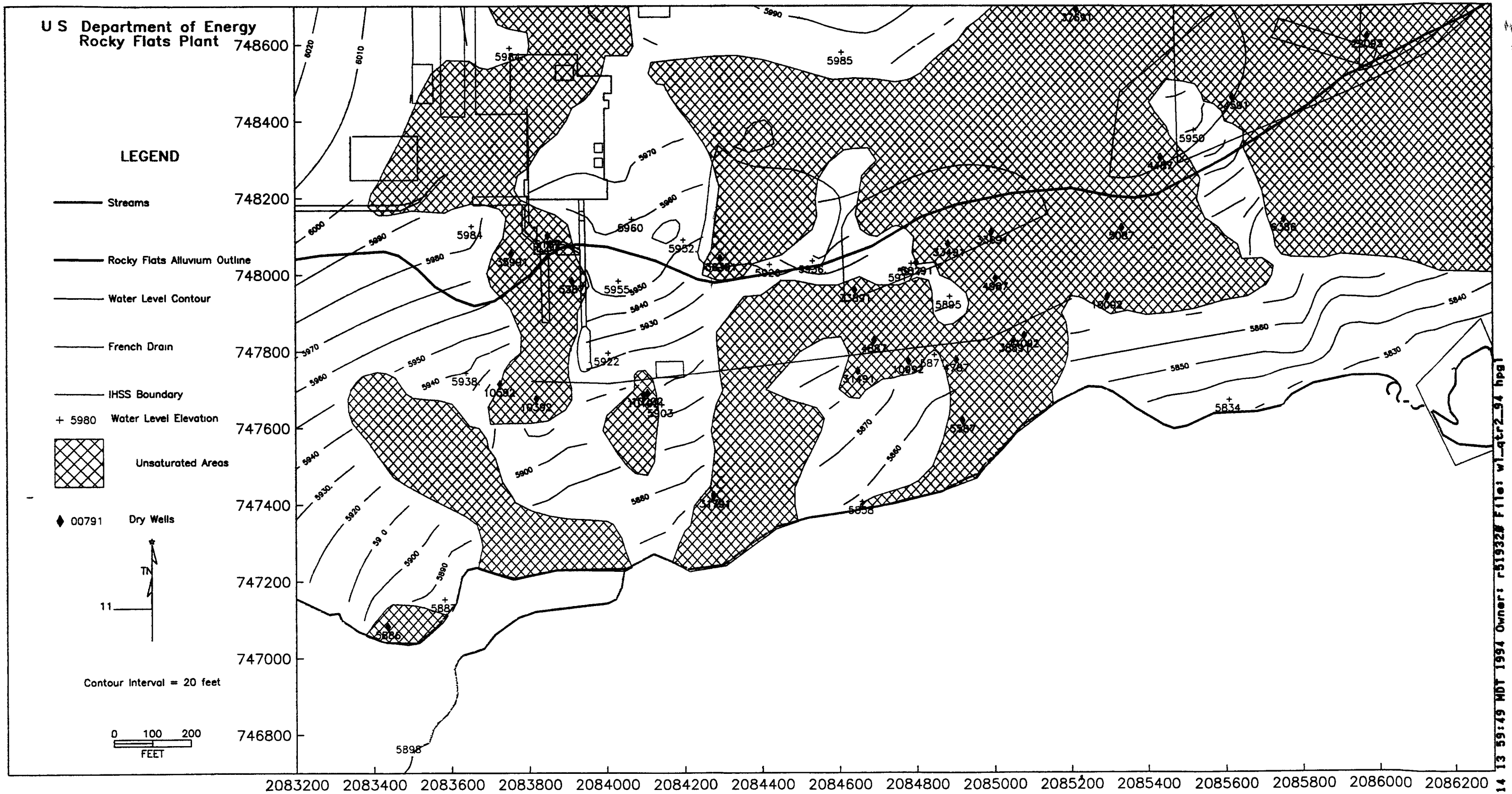

FIGURE 9 1 1

dgl Thu Jul 14 13 59:49 MDT 1994 Owner: r519328 File: wl_qtr2_94 hpgl