Current Conditions Document Review Cycle

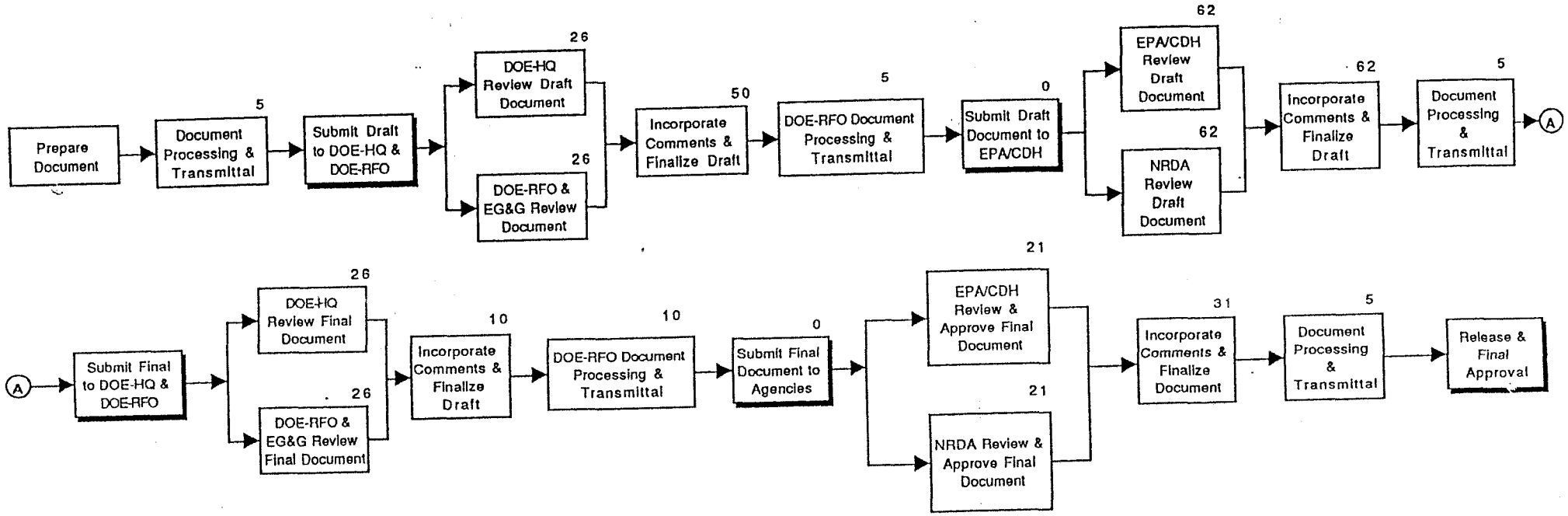

Generic Logic 1 4/13/93 4:53 PM